BERKELEY COUNTY ENGINEERING AND BUILDING INSPECTIONS

400 West Stephen Street - Suite 202, Martinsburg, WV 25401-3838
Telephone: 304-264-1966, Fax: 304-262-3128
Web Page: www.berkeleywv.org

Requirements for attached decks have changed with the adoption of the 2015 edition of the IRC. Please answer the following questions to help the plan review process.

1. Is the ledger board existing _____
2. Is this house on a full basement _____
3. Is the existing basement finished in the area the deck is to be attached _____
4. Is or will the ledger board be attached by ½" lag screws or bolts _____ Note: new requirements for lag screws and bolts spacing. To be placed minimum 2" from top and minimum ¾" bottom of ledger and 2" from end. Spacing per attached table. Lag screws minimum 5" long
5. Alternative method of attachment Please describe. Provide manufacturer specifications
   _____
   _____
   _____
6. Washers are required on all lag bolts and screws
7. Is any portion of structure, where deck is to be attached, cantilevered _____
8. Decks cannot be supported by cantilevered areas of the structure
9. All new attached decks require lateral hold down devices. If the deck is being attached to an area where the room inside below the deck level is finished then a freestanding deck is to be installed. See illustration of lateral HDD attached
10. Decks being attached to rimboard must be attached by rimboard manufacturer installation instructions or by a method prescribed by a WV licensed design professional.
11. Where joists are top loaded on beams at both ends (freestanding decks) hurricane straps or similar hold down devices are required
12. Decks cannot be attached through masonry or stone veneer
13. CARRIAGE BOLTS ARE NOT ALLOWED

Signature_____ Date_____

Not suitable for spas, hot tubs or jacuzzis

This design is for decks only. If a hot tub is planned then a design from a WV design professional is required. If a future room is possible then larger footings may be required.

Decks less than 3' above grade require framing inspection. All decks require 2nd footing inspection after concrete pour.

Decks with cantilevers require uplift protection by use of hangers or hurricane straps.

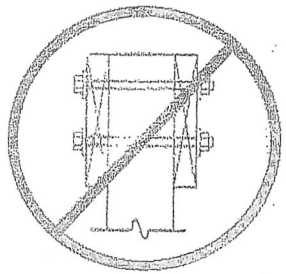

NOT ALLOWED

* Applicant:
* Location:
*ATTACHED _____

JOIST, BEAM AND SUPPORT POST DETAIL

ATTACHED DECKS REQUIRE LATERAL HOLD DOWN DEVICES

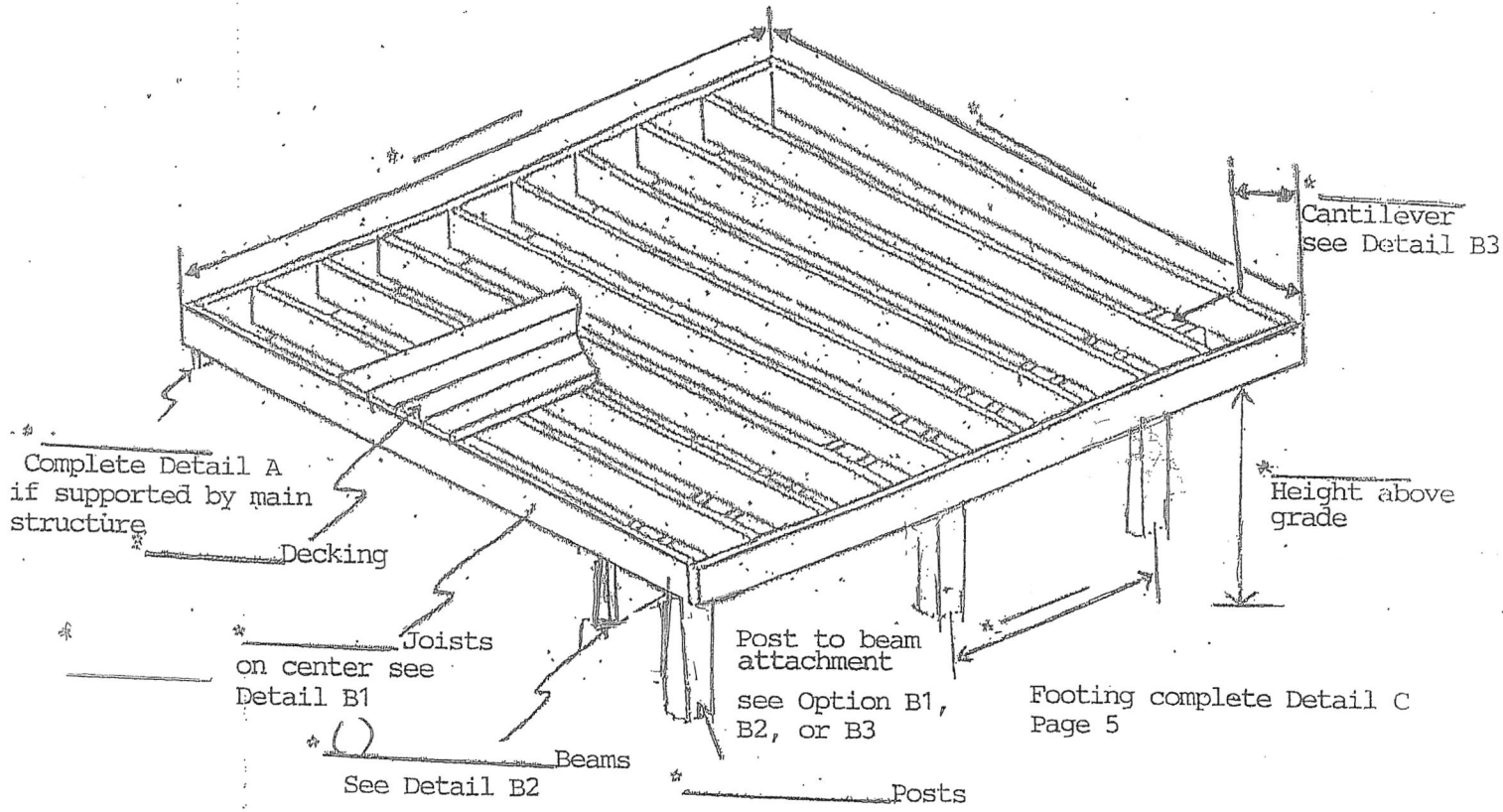

Do not notch deck railing posts.
Factory notched posts are acceptable.

Guardrail required if 30" or more off ground.
See Detail D and Page 6 for stair, handrail and guardrail requirements.

* COMPLETE ALL MARKED FIELDS

Single Family Residential—Uncovered Deck and Porches

Detail A

DIRECTIONS:

1. Identify Ledger Size 2 x _____ X _____ (example 2' x 10 " X 10')
2. Identify # of fasteners needed _____ Size _____ X _____ ☐ Other* _____ @ _____ O.C.
   (example two 1/2" X 6" lags @ 18" O.C. See Table A1)*If using fasteners other than 1/2 lag or bolts, provide manufacturer's specs.
3. Location of lateral load connections _____ (see Figure A2)

☐ 1/2 Lags
☐ 1/2 Bolts
☐ 1/2 Bolts w washers

NOTE: This is for attached decks only. Where positive connection to the primary building structure cannot be verified during inspection, decks shall be self-supporting (507.2)

Table A1

IRC TABLE R507.2

FASTENER SPACING FOR A SOUTHERN PINE OR HEM-FIR DECK LEDGER AND A 2-INCH NOMINAL SOLID-SAWN SPRUCE-PINE-FIR BAND JOIST [C,F,G] (Deck live load = 40 psf, deck dead load = 10 psf)

FLOOR JOIST SPAN	6' and less	6'1" to 8'	8'1 to 10'	10'1" to 12'	12'1" to 14'	14'1" to 16'	16'1" to 18'
Connection details	On-center spacing of fasteners [d,e]						
1/2 inc diameter lag screw with 15/32 inch maximum sheathing [a]	30	23	18	15	13	11	10
1/2 inch diameter bolt with 15/32 inch maximum sheathing	36	36	34	29	24	21	19
1/2 inch diameter bolt with 1 inch maximum sheathing [a]	36	36	29	24	21	18	16

a. The tip of the lag screw shall fully extend beyond the inside face of the band joist.
b. The maximum gap between the face of the ledger board and face of the band joist.
c. Ledgers shall be flashed to prevent water from contacting the house band joist.
d. Lag screws and bolts shall be staggered in accordance with the diagram above.
e. Deck ledger shall be minimum 2 x 8 pressure-preservative-treated No. 2 grade lumber, or other approved materials by standard engineering practice.
f. When solid-sawn preservative-treated deck ledgers are attached to a minimum 1 inch thick engineered wood product (structural composite lumber, LVL or wood structural panel band joist), the ledger attachment shall be designed in accordance with accepted engineering practice.
g. A minimum 1 x 9 1/2 Douglas Fir LVL rimboard shall be permitted in lieu of the 2-inch nominal band joist.
h. Wood structural panel sheathing, gypsum board sheathing or foam sheathing not exceeding 1 inch thickness shall be permitted. The maximum distance between the face of the ledger board and the face of the band joist shall be 1 inch.

Figure A1

Ledger Bolt Schedule per IRC R507.2.1(1)
See Table A1

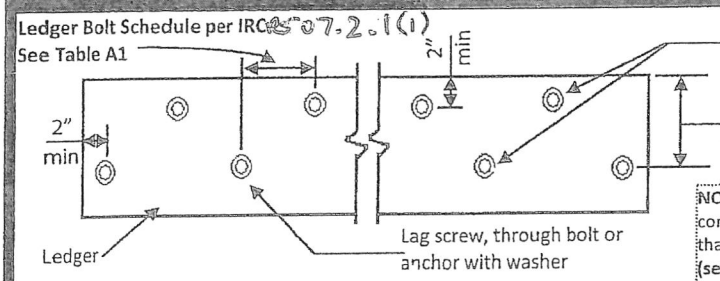

NOTE: Deck lateral load connection required not less than 2 locations per deck. **(see figure A2)**

Figure A2

Deck lateral load connection
R507.2.3(1)

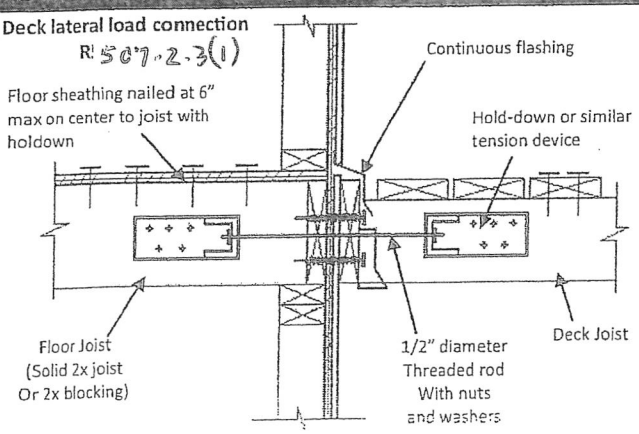

9-17-10 V12 GT

03/21/2012

Table 1A. Maximum Joist Spans ($L_J/4$ [2])

Species	Size	Joist Spacing (o.c.)					
		Without Overhangs [1]			With Overhanges up to $L_J/4$ [2]		
		12"	16"	24"	12"	16"	24"
Southern Pine	2x8	13'-8"	12'-5"	10'-2"	10'-9"	10'-9"	10'-2"
	2x10	17'-5"	15'-10"	13'-1"	15'-6"	15'-6"	13'-1"
	2x12	18'-0"	18'-0"	15'-5"	18'-0"	18'-0"	15'-5"
Douglas Fir-Larch, Hem-Fir, SPF [3]	2x8	12'-6"	11'-1"	9'-1"	9'-5"	9'-5"	9'-1"
	2x10	15'-8"	13'-7"	11'-1"	13'-7"	13'-7"	11'-1"
	2x12	18'-0"	15'-9"	12'-10"	18'-0"	15'-9"	12'-10"
Redwood, Western Cedars, Ponderosa Pine[4], Red Pine [4]	2x8	11'-8"	10'-7"	8'-8"	8'-6"	8'-6"	8'-6"
	2x10	14'-11"	13'-0"	10'-7"	12'-3"	12'-3"	10'-7"
	2x12	17'-5"	15'-1"	12'-4"	17'-5"	15'-1"	12'-4"

1 Assumes 40 psf live load, 10 psf dead load, l/360 defelction, No. 2 grade, and wet service conditions. See Figure 1B.
2 Assumes 40 psf live load, 10 psf dead load, L/180 cantilever deflection with 220 lb point load, No. 2 grade, and wet service conditions. See Figure 1A and Figure 2.
3 Incising assumed for refractory species including Douglas fir-larch, hem-fir, and spruce-pine-fir.
4 Design values based on northern species with no incising assumed.

Table 2. Deck Beam Spans (L_B) [1]

Species	Size[4]	Joist Spans (L_J) Less Than or Equal to:						
		6'	8'	10'	12'	14'	16'	18'
Douglas Fir-Larch [2], Hem-Fir[2], SPF [2], Redwood, Western Cedars, Ponderosa Pine [3], Red Pine [3]	3x6 or 2-2x6	5'-5"	4'-8"	4'-2"	3'-10"	3'-6"	3'-1	2'-9"
	3x8 or 2-2x8	6'-10"	5'-11"	5'-4"	4'-10"	4'-6"	4'-1"	3'-8"
	3x10 or 2-2x10	8'-4"	7'-3"	6'-6"	5'-11"	5'-6"	5'-1"	4'-8"
	3x12 or 2-2x12	9'-8"	8'-5"	7'-6"	6'-10"	6'-4"	5'-11"	5'-7"
	4x6	6'-5"	5'-6"	4'-11"	4'-6"	4'-2"	3'-11"	3'-8"
	4x8	8'-5"	7'-3"	6'-6"	5'-11"	5'-6"	5'-2"	4'-10"
	4x10	9'-11"	8'-7"	7'-8"	7'-0"	6'-6"	6'-1"	5'-8"
	4x12	11'-5"	9'-11"	8'-10"	8'-1"	7'-6"	7'-0"	6'-7"
	3-2x6	7'-4"	6'-8"	6'-0"	5'-6"	5'-1"	4'-9"	4'-6"
	3-2x8	9'-8"	8'-6"	7'-7"	6'-11"	6'-5"	6'-0"	5'-8"
	3-2x10	12'-0"	10'-5"	9'-4"	8'-6"	7'-10"	7'-4"	6'-11"
	3-2x12	13'-11"	12'-1"	10'-9"	9'-10"	9'-1"	8'-6"	8'-1"

1. Assumes 40 psf live load, 10 psf dead load, L/360 simple span beam deflection limit, L/180 cantilever deflection limit, No. 2 grade, and wet service conditions.
2. Incising assumed for refractory species including Douglas fir-larch, hem-fir, and spruce-pine-fir.
3. Design values based on northern species with no incising assumed.
4. Beam depth must be equal to or greater than joist depth if joist hangers are used (see Figure 6, Option 3).

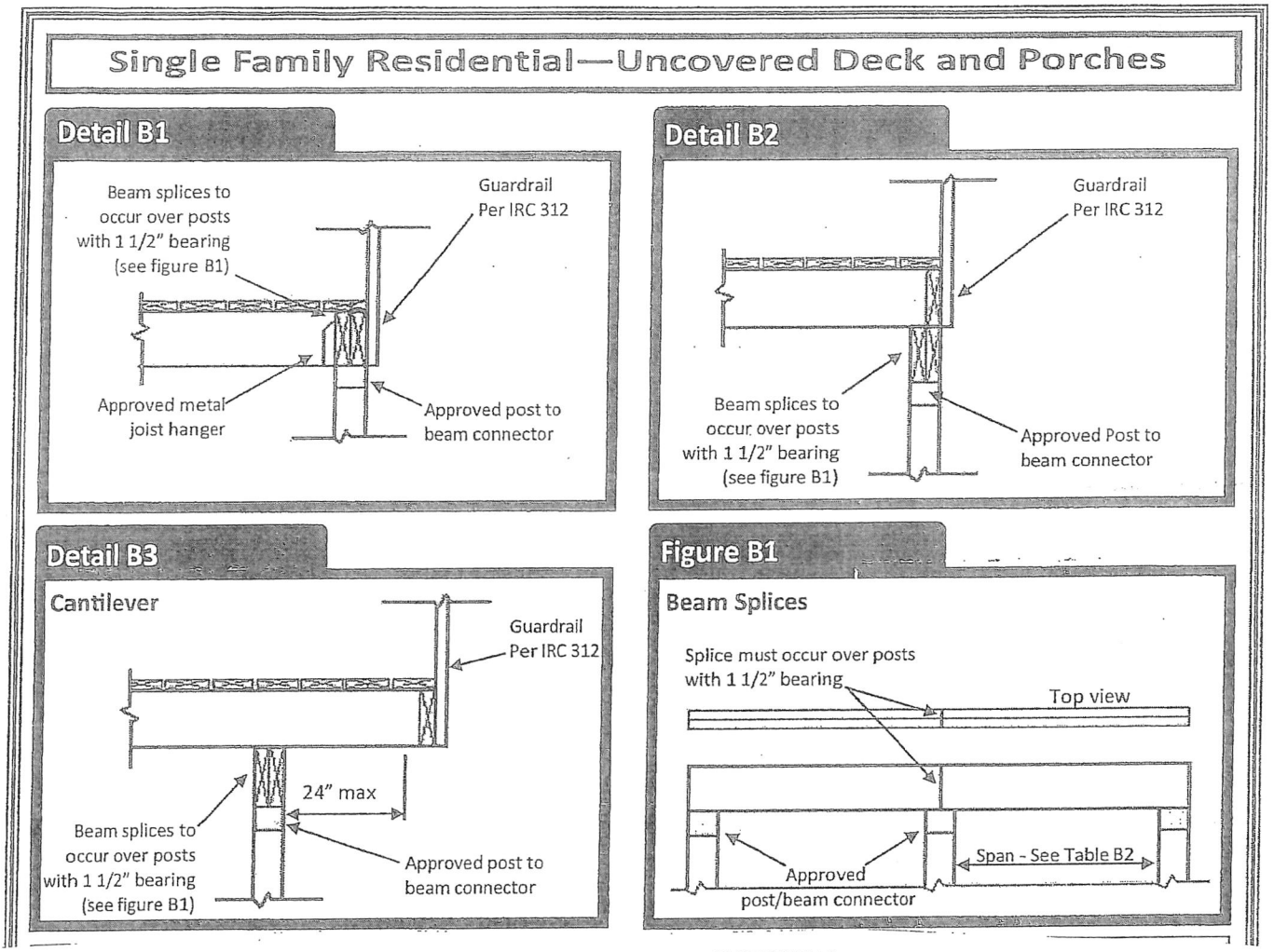

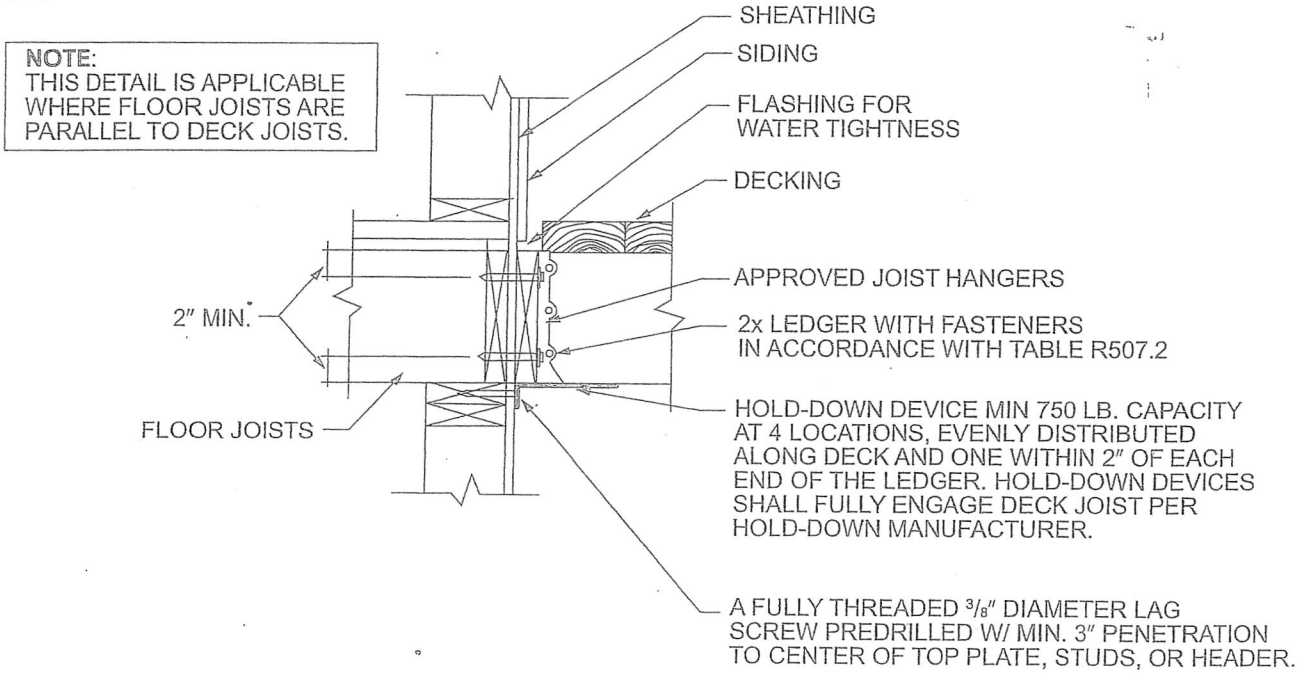

For SI: 1 inch = 25.4 mm, 1 foot = 304.8 mm.

FIGURE R507.2.3(2)
DECK ATTACHMENT FOR LATERAL LOADS

Alternate Approved Post-to-Beam Post Cap Attachment

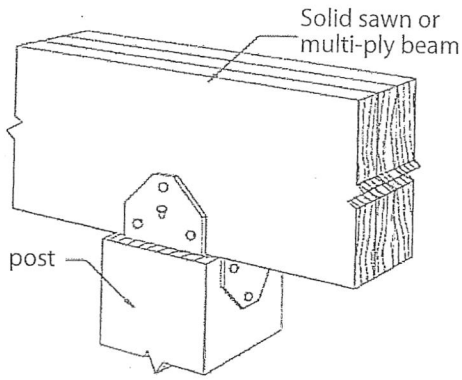

Post-to-Beam Attachment Requirements

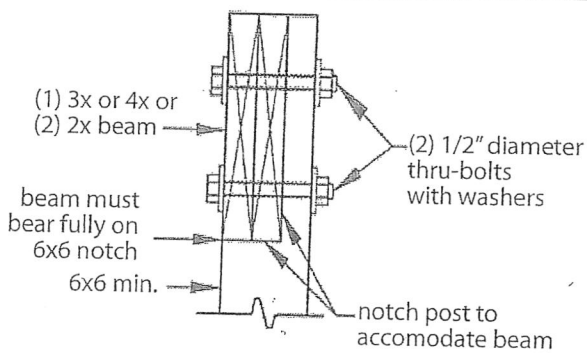

Single Family Residential—Uncovered Deck and Porches

Detail C

Post & Footing Detail

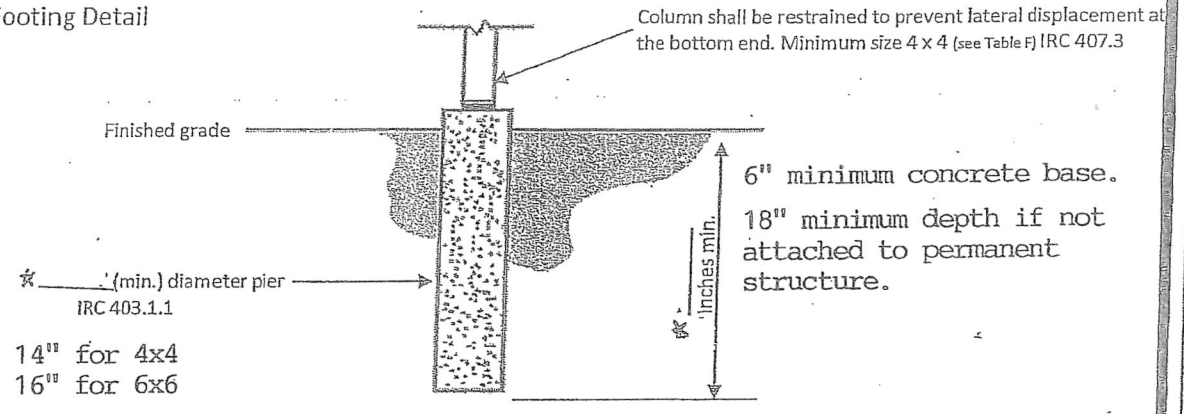

Detail D - Stair & Handrail Specifications

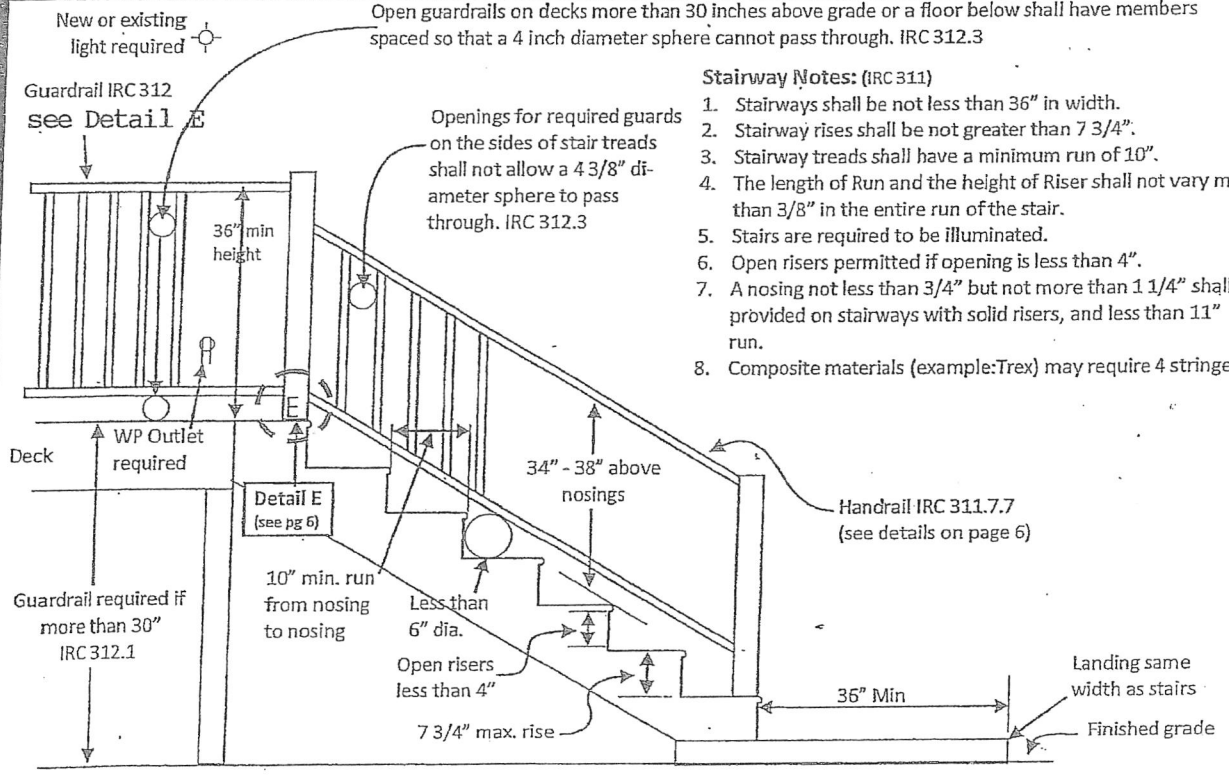

Stairway Notes: (IRC 311)

1. Stairways shall be not less than 36" in width.
2. Stairway rises shall be not greater than 7 3/4".
3. Stairway treads shall have a minimum run of 10".
4. The length of Run and the height of Riser shall not vary more than 3/8" in the entire run of the stair.
5. Stairs are required to be illuminated.
6. Open risers permitted if opening is less than 4".
7. A nosing not less than 3/4" but not more than 1 1/4" shall be provided on stairways with solid risers, and less than 11" run.
8. Composite materials (example:Trex) may require 4 stringers

Handrail Notes:

1. Handrails shall be continuous on at least one side of stairs with 4 or more risers. IRC 311.7.7.2
2. Top of the handrails shall be placed not less than 34 inches nor more than 38 inches above stair nosings. 311.7.7.1
3. The handgrip portion of handrails shall be not less than 1-1/4 inches nor more than 2 1/4 inches in cross section for non circular handrails.
4. Handrails shall be placed not less than 1-1/2 inches from any wall or other surface. IRC 311.7.7.2

03/21/2012

Single Family Residential—Uncovered Deck and Porches

Preferred Handrail Details

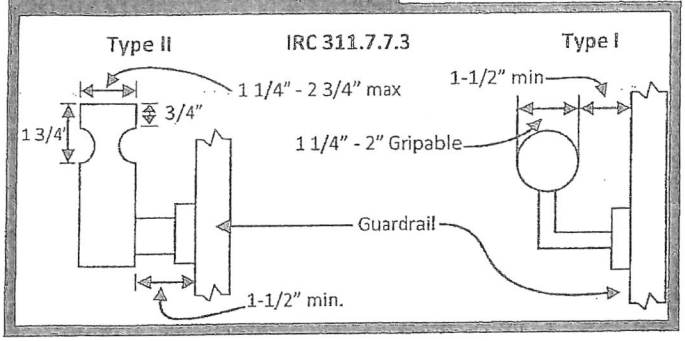

Unacceptable Handrails

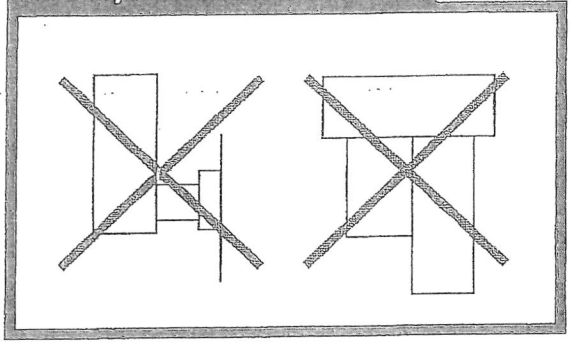

Detail E

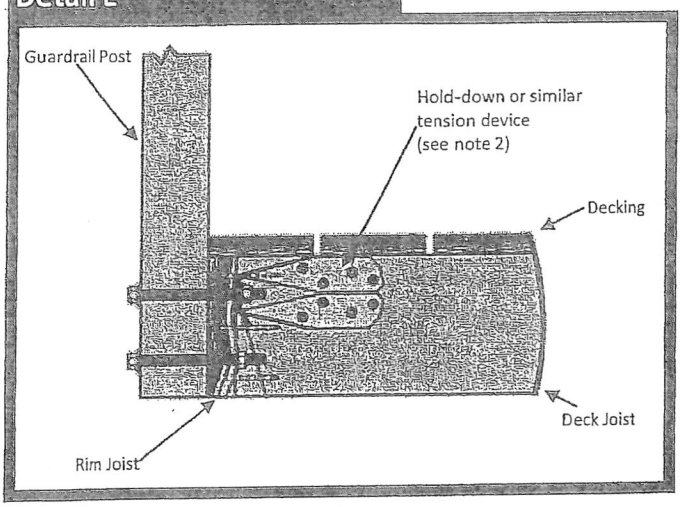

Guardrail Notes:

1. Shall be able to resist a single concentrated load applied in any direction at any point along the top of 200 lbs/sq ft. (Table 301.5)
2. Approved fasteners shall be used to connect post to deck and be able to resist 1700 lb force.
3. Guard in-fill components, balusters, and panel fillers shall be designed to withstand a horizontally applied normal load of 50 lbs on an area equal to one sq ft. (Table 301.5)
4. Guard in-fill components, balusters, and panel fillers shall be designed to shed water.
5. 4 x 4 posts should be spaced every 6 ft.
6. 4 x 4 posts cannot be field notched.

Table F	RECOMMENDED POST SIZE				
Deck height	Load Area *				
	48	72	96	120	124
0' to 6'	4 x 4	4 x 4	6 x 6	6 x 6	6 x 6
6' and up	6 x 6	6 x 6	6 x 6	6 x 6	6 x 6

*To calculate "Load area" multiply the distance between the beams by the distance between the posts (in feet).

03/21/2012