Berkeley County

Subdivision Ordinance

Ordinance Adopted
July 30, 2009,
Effective September 1,
2009

AMENDMENTS

County Council Approval	Sections
June 21, 2012……..	601, 602.1 **(effective 6/21/12)**
January 10, 2013…….	201, 302.2, 304, 305.3(c), 305.4, 306.2.b.4, 306.2.c.2.f, 306.3, 401.3, 402.2.c.23, 403.2.23, 403.2.24, 404, 404.1, 404.2, 502.2, 503, 504.B, 504.e, 504 Table 5-3, 704.8, 705,705.1, 705.2, 706.A, 709.E, 801, 801 Table 8-1, 801.1.1.1, 801.1.6.a, 802.1.b, 802.2.b, 901, 1208, 1208.1, 1208.2, 1208.3, 1208.4 **(effective 3/1/13)**
June 6, 2013_____	602.1.1 **(effective 6/13/13)**

TABLE OF CONTENTS

Article 1 – Short Title, Authority, Purpose, and Jurisdiction 1-1

Section 101 Title 1-1
Section 102 Short Title 1-1
Section 103 Legislative Authority 1-1
Section 104 Statement of Legislative Intent 1-1
Section 105 Statement of Purpose 1-1
Section 106 Jurisdiction 1-2
Section 107 Interpretation 1-2
Section 108 Repeal of Conflicting Ordinances 1-3
Section 109 Severability 1-3
Section 110 Subdivision of Record 1-3

Article 2 – Definitions 2-1

Section 201 Definitions 2-1

Article 3 – Processing Procedures 3-1

Section 301 General 3-1
Section 302 Types of Minor Land Development Plans 3-2
Section 303 Procedure, Major Subdivision Plans 3-3
Section 304 Sketch Plan Review and Comment 3-3
Section 305 Preliminary Plan Review and Advancement 3-5
Section 306 Final Plan Review and Approval 3-10

Article 4 – Plan Requirements 4-1

Section 401 Sketch Plat 4-1
Section 402 Preliminary Plat 4-3
Section 403 Final Plat 4-28
Section 404 Minor Plat 4-32

Article 5 – Design Standards 5-1

Section 501 General 5-1
Section 502 Streets, Roads and Parking Facilities 5-2
Section 503 Building Setback Lines 5-3
Section 504 Lots 5-4
Section 505 Restrictive Easements 5-9
Section 506 Grading and Drainage 5-9
Section 507 Erosion and Sediment Control 5-11

Article 6 – Improvements Guarantees 6-1

Section 601 General 6-1
Section 602 Guarantee for Installation of Improvements 6-1
Section 603 Subdivision Fees 6-3

TABLE OF CONTENTS

Article 7 – Required Improvements 7-1

Section 701 General 7-1
Section 702 Monuments and Markers 7-1
Section 703 Street Signs and Traffic Control Devices 7-2
Section 704 Street Improvements 7-2
Section 705 Sidewalks 7-3
Section 706 Curbs 7-4
Section 707 Culverts 7-5
Section 708 Water Supply Improvements 7-5
Section 709 Sanitary Sewer Improvements 7-6
Section 710 Drainage Improvements 7-6
Section 711 Storm Sewer and Storm Water Drainage 7-7
Section 712 Community Open Spaces and Provisions of Recreational Amenities 7-8
Section 713 Off-Site Extensions 7-8
Section 714 Provisions for Maintenance and Operation 7-8

Article 8 – Off-Street Parking, Buffering and Screening 8-1

Section 801 Off-Street Parking 8-1
Section 802 Minimum Buffer and Screening Requirements ..... ……8-13

Article 9 –Planned Unit Developments 9-1

Section 9.01 General Provisions 9-1
Section 9.02 Requirements 9-1
Section 9.03 Review and Approval 9-2
Section 9.04 Content and Format of Application 9-3

Article 10 – Manufactured/Mobile Home Community 10-1

Section 1001 General 10-1
Section 1002 Design Standards 10-1
Section 1003 Manufactured/Mobile Home Pad 10-2
Section 1004 Streets 10-2
Section 1005 Off-Street Parking 10-2
Section 1006 Water and Sewage 10-2
Section 1007 Utilities 10-2
Section 1008 Buffer-strips, Screening and Landscaping 10-3
Section 1009 Accessory Structures 10-3
Section 1010 Solid Waste Disposal 10-3

Article 11 – Recreational Parks & Campgrounds 11-1

Section 1101 Design Standards 11-1
Section 1102 Streets and Parking 11-1
Section 1103 Water and Sewer 11-2
Section 1104 Utilities 11-2

TABLE OF CONTENTS

Section 1105 Buffer-strips, Screening and Landscaping 11-2
Section 1106 Solid Waste Disposal 11-2
Section 1107 Open Space 11-2

Article 12 – Administration and Amendments……... 12-1

Section 1201 Administration 12-1
Section 1202 Application Fees 12-1
Section 1203 Waivers 12-2
Section 1204 Conditional Waivers 12-3
Section 1205 Request for Reconsideration..... 12-3
Section 1206 Appeal 12-3
Section 1207 Planning Commission Records 12-3
Section 1208 Remedies and Jurisdiction 12-4
Section 1209 Amendments 12-5

Appendices

Appendix A - The Manual of Street Standards

Appendix B - Developers Agreement

Appendix C – Environmental Impact Checklist

Appendix D- Salvage Yard Ordinance

Appendix E- Airport Ordinance

Appendix F- Floodplain Ordinance

Appendix G- Schedule of Fees

Appendix H-Modification of Bonding Obligations Agreement

TABLE OF CONTENTS

ARTICLE 1 – TITLE, AUTHORITY AND PURPOSE

Section 101. Title

An Ordinance establishing rules, regulations, and standards governing the subdivision and development of land requiring the recordation of a plat or plan in accordance with Chapter 39, Article 1, Section 13, of West Virginia Code, 1931, as amended; establishing rules, regulations and standards governing the development of land requiring the issuance of a building permit in accordance with Chapter 8A, Article 4, Section 2 (14), of West Virginia Code, 2004, as amended; setting forth the procedures to be followed in administering these rules, regulations, and standards; and setting forth the penalties for the violation thereof.

Section 102. Short Title

This Ordinance shall be known as and may be cited as "The Berkeley County Subdivision Ordinance".

Section 103. Legislative Authority

These subdivision regulations are established in accordance with Chapter 8A, Article 5, of West Virginia Code, 2004, as amended.

Section 104. Statement of Legislative Intent

It is the object of Article 5, Chapter 8A, of West Virginia Code, to encourage local units of government to improve the present health, safety, convenience and welfare of their citizens, and to plan for the future development of their communities to the end that highway systems be carefully planned; that new communities grow only with adequate highway, utility, health, educational and recreational facilities; that the needs of agriculture, industry, and business be recognized in future growth; that residential areas provide healthy surroundings for family life; and that the growth of the community is both commensurate with, and promotes the efficient and economical use of public funds and resources.

Section 105. Statement of Purpose

These subdivision regulations are adopted by the County Council of Berkeley County, West Virginia, for the following purposes:

1. To govern land development according to the Goals, Policies and Recommendations stated in the Berkeley County Comprehensive Development Plan;

2. To assist orderly and efficient land development;

3. To provide for the coordination of existing streets and public utilities with new streets and utilities;

4. To provide for efficient and orderly extension of community services and facilities at minimum cost and maximum convenience;

5. To ensure that proper provisions are made for drainage, water supply, sewage, and other needed improvements;

6. To promote the health and safety of the residents of Berkeley County; and

7. To ensure equitable processing of all subdivision plats and land development plans by providing uniform procedures and standards for observance by both Subdividers/Developers and the Berkeley County Planning Commission.

Section 106. Jurisdiction

The provisions of this Ordinance shall apply to all lands within Berkeley County, West Virginia, except for lands that are within incorporated areas.

Section 107. Interpretation

The provisions of this Ordinance shall be held to be the minimum requirements to meet the objectives presented in Chapter 8A, of West Virginia Code, as well as the purposes outlined above. In the interpretation and application of the provisions of this Ordinance, said provisions shall be deemed to be the minimum requirements necessary for the promotion and protection of public health, safety and welfare. Where the provisions of this Ordinance and all implementing standards and specifications which are more restrictive than those of any other County Ordinance or any regulation or any applicable land development agreement, the provisions of this Ordinance and its standards and specifications shall be controlling. Where the provisions of any state statute, regulation, other County Ordinance or applicable land development agreement impose greater restrictions upon land development than this Ordinance, the provisions of such statute, regulation, other Ordinance, or applicable land development agreement shall be controlling.

All subjective decisions required by this Ordinance shall be made by majority vote of Planning Commission members present at a public meeting in consideration of the advice along with the recommendation of the Planning Commission Staff and/or County Engineer and all evidence presented at the public meeting.

Section 108. Repeal of Conflicting Ordinances

All Ordinances or parts of Ordinances in conflict with this Ordinance, or inconsistent with the provisions of this Ordinance, are hereby repealed to the extent necessary to give this Ordinance full force and effect.

Section 109. Severability

1. If a court of competent jurisdiction declares any provisions of this Ordinance to be invalid or ineffective in whole or in part, the effect of such decision shall be limited to those provisions which are expressly stated in the decision to be invalid or ineffective, and all other provisions of this Ordinance shall continue to be separately and fully effective.

Section 110. Subdivision of Record

Any plat of a subdivision on record in the Office of the Clerk of the County Council of Berkeley County prior to the effective date and time of this Ordinance shall be recognized as a legal subdivision, provided that it meets all legal requirements that were in place at the time the subdivision was created and recorded. However, the re-platting of a prior recorded plat or any material changes on the prior recorded plat shall be subject to this Ordinance. The prior recording of a plat of a portion of a larger tract shall not exempt from the provisions of this Ordinance the balance of the tract remaining unplatted.

Any project that has submitted a Sketch Plan to the Planning Department and has submitted all or part of their Preliminary Plan, and said Preliminary Plan is going through the review process, as of the effective date of the revised Berkeley County Subdivision Regulations may proceed under the terms of the Subdivision Regulations which were adopted by the County Commissioners on November 20, 2003, and effective as of January 1, 2004, and all subsequent amendments thereto which are effective as of the date upon which the development proposal is submitted for review. This decision is left to the discretion of the applicant.

If there are areas of a parcel proposed for development which are identified only as “future phases”, wherein proposed lot sizes and layouts, as well as road systems, utility provisions, etc. are not specified, these areas shall not be eligible for Planning Commission review and approval under the design standards and all other guidelines contained in the 2004 Berkeley County Subdivision Regulations and subsequent amendments thereto.

Rather, these future sections must comply with design standards and all other guidelines specified in the 2009 Adopted Berkeley County Subdivision Regulations and all amendments thereto which are effective as of the date upon

which the development proposal is submitted to the Planning Department for consideration.

Development proposals that were processed under the 2004 Berkeley County Subdivision Regulations as described above, must receive Preliminary Plat recommendation for advancement for all phases shown on the Sketch Plan within one (1) calendar year from the effective date of the 2009 Adopted regulations in order to be processed under the 2004 Berkeley County Subdivision Regulations. If all phases shown on the Sketch Plan have not been submitted for Preliminary Plan review and/or advanced to Final Plan with one (1) calendar year, the remaining portions of said Sketch Plan shall be reviewed under the terms of the 200~~9~~ Adopted Berkeley County Subdivision Regulations.

Projects which do not require Planning Commission review and approval, such as minor subdivisions and family transfers which have been submitted for review prior to the effective date of the 2009 Adopted Berkeley County Subdivision Regulations may be processed either under 2003 Subdivision Regulations or under the 2009 Revised Subdivision Regulations. This decision is left to the discretion of the applicant.

ARTICLE 2 – DEFINITIONS

Section 201. Definitions

Interpretation of Terms or Words: Words in these regulations are used in their ordinary English usage. Certain terms or words used herein shall be interpreted and defined as follows and wherever used in these regulations shall have the meaning indicated in this section.

The word "shall" is to be interpreted as mandatory and shall be complied with unless modified; "may" and "should" are to be interpreted as having permission or being allowed to carry out a provision.

All words used in the singular shall include the plural, and all words used in the present tense shall include the future tense, unless the context clearly indicates the contrary. All masculine pronouns are interpreted to be gender neutral.

Addition/Mergers: The addition of land to an existing parcel of record from an adjoining parcel or the combining of two (2) or more existing parcels of land to increase the lot area.

Agent: Any person, authorized by another to act for him or her.

Agricultural land management activities: The cultivation of plant crops or the raising of livestock, including but not limited to forage, grain and field crops, pasturage, dairy and dairy products; poultry and poultry products; equestrian uses, including the boarding of horses; sale of crops; livestock and fowl uses and products; bees and apiary products; fruits and vegetables of all kinds; nursery, floral and greenhouse products; aquaculture; a winery; stand alone, non-retail micro-brewery; grain mill; and the primary processing and storage of any agricultural product.

Agricultural Purpose: The art or science of cultivating the ground and the production of plants and animals useful to man or beast and including gardening or horticulture, fruit growing, storage and marketing.

Alley: A public way which is a narrow passage, usually smaller than a street, and which is not designed for general travel but is used primarily as a means of access to the rear of residences and business establishments and which generally affords only a secondary means of access to an abutting property along its length.

Applicant: Any person who submits to the Planning Commission a Minor or Major Land Development Plan for the purpose of obtaining approval thereof.

Application, formal: An application is formal at such time as the Planning Commission is assured that all plats, plans, and attendant documents are in proper form, content and number required in accordance with these regulations. Such

application shall be considered a formal application unless the applicant is advised in writing within seven (7) days of any submission that such documents are not in proper form, content, or number.

Area, gross: All area within a Land Development Plat, including those areas intended for residential, commercial or industrial use. Gross area shall also include severe slopes, streets and alleys, off-street parking spaces and recreational sites. Areas dedicated to county schools or highways shall be excluded from the gross area calculation.

Average Daily Trip (ADT): Residential ADT, seven (7) trips per day per unit. Commercial ADT must do a traffic study of comparable existing sites within the county. Should no comparable exist, ADT may be calculated on the basis of the current edition of the Trip Generation Manual published by the Institute of Transportation Engineers (I.T.E.).

Base Flood (100-year Flood): A flood having a one (1) percent chance of being equaled to or exceeded in any given year, based on the Federal Emergency Management Agency (FEMA), Flood Insurance Rate Maps (FIRMS), or by engineering study.

Block: A piece or parcel of land entirely surrounded by streets or highways, railroad rights-of-way, parks, streams or other bodies of water, severe slopes, cemeteries and corporate boundary lines of a city, or a combination thereof as defined in Section 503.1 of this Ordinance.

Bond: A written instrument with a clause binding an Applicant to pay a certain penalty (or a portion thereof) to the County Commission; conditioned, however, with a statement that the payment of the penalty or portion thereof may be avoided upon satisfactory construction and completion of improvements required within a Land Development Plan. A bond is secured by a surety, by cash in escrow, or by letter of credit which is satisfactory to the Planning Commission.

Boundary Line Adjustment: A boundary line adjustment, also known as a lot line adjustment, accommodates a transfer of land between adjacent separate lots. Boundary line adjustments do not create additional lots or building sites. A boundary line adjustment allows legal transfer of ownership and minor relocation of property boundaries or merging lots for any recorded or unrecorded, subdivided parcel. Changes in lot configuration may also be allowed providing that the building site remains within the original parent parcel. This process allows for corrections to created gaps or overlaps of property caused by erroneous occupation or legal description. **(Amended January 10, 2013)**

Bridge: A structure that allows people or vehicles to cross an obstacle such as a river, road, canal or railway.

Building: A structure which is designated and suitable for the habitation or shelter of human beings or animals, or the shelter or storage of property, or for the use and occupation for some purpose of trade or manufacture.

Building Line: (See Setback Line)

Campground: Any area, place, parcel or tract of land on which two (2) or more campsites or spaces are offered to the public for payment, occupied or intended for occupancy by camping units for temporary periods, but not for permanent residential use. A campground shall include, but not be limited to, any travel trailer camp, recreational camp, church camp or family campground. A campground is so defined whether or not campsite and facilities are granted free of charge, by rental fee, or by lease.

Camping unit: Any device or vehicular-type structure used for the purpose of temporary living or shelter during periods of recreation, vacation, leisure time or travel. A camping unit shall include a tent, tent-trailer, travel trailer, pick-up camper, motor home or a recreational vehicle or mobile home.

Campsite: A designated site or plat of ground within a campground that is used or intended for occupation by a camping unit.

Cartway: See Roadway

Cemetery: A parcel of land used solely as a burial ground.

Certification of Compliance: See NPDES Permit.

Clearing: The cutting and/or removing trees or vegetation other than grass by any means.

Clear Sight Triangle: An area of unobstructed vision at street intersections defined by lines of sight between points at a given distance from the intersection of the center lines of streets.

Clerk of the County Commission: The Clerk of the County Commission of Berkeley County, West Virginia.

Commercial Development: Any wholesale, retail, or service business established to carry on a trade for profit or non-profit organizations including places of worship.

Common area: Property held in common by mutual ownership or by an association of property owners within a development or held in corporate ownership for the benefit of each owner within a development. Such property is privately held and not intended for public use.

Common Interest Community: Ownership characterized by mutual ownership of common areas, either jointly or through membership in an association. (i.e. single family, condominiums, planned unit developments, and townhomes)

Community Facilities: Existing, planned or proposed parks, playgrounds, schools and other public lands and buildings of the County.

Community Well: A well or wells created to serve a proposed development. A community well is subject to the jurisdiction of the WV Public Service Commission as set forth in WV Code Article 16-1-1 et. seq. and 31-1-1 et. seq.

Comprehensive Plan: The plan for the development of the area within the jurisdiction of the Berkeley County Planning Commission, adopted by the Planning Commission and the County ~~Commission~~ Council, including amendments thereto.

Conditional Approval: The approval, with conditions, of a plan for a land development.

Condominium: Ownership in common with others of a parcel of land and certain parts of a building thereon which would normally be used by all the occupants, together with individual ownership in fee of a particular unit or apartment in such building or on such parcel of land and may include dwellings, offices and other types of space in commercial buildings or on property.

Conservation Easement: As defined by West Virginia Code Section 3, Article 12, Chapter 20, a conservation easement is a non-possessory interest of a holder in real property, whether appurtenant or in gross, imposing limitations or affirmative obligations for purposes which may include, but are not limited to, retaining or protecting the natural, scenic or open space values of real property; assuring its availability for agricultural, forest, recreational, or open space use; or protecting its natural resources or wildlife. In addition, the conservation easement must be held or co-held by at least one “holder” as defined in West Virginia Code Section 3, Article 12, Chapter 20 and must be perpetual in duration.

Construction Bond: See Bond

County: Berkeley County, West Virginia.

County (Commission) Council: The County Council of Berkeley County, West Virginia.

County Engineer: The engineer carrying out the duties and responsibilities under the Berkeley County Subdivision Regulations, including the County Engineer, engineering staff of the County Engineer, or engineering staff of the Planning Commission.

Covenant: An agreement, restriction, or condition placed on a parcel of land which remains attached to the land and which entitles successive land owners to its benefits and/or obligations.

Day: A calendar day, which is denoted as a 24 hour day on a calendar.

Dedication: The deliberate setting aside and appropriation of land by its owner for any general or public uses, reserving to himself no other rights than such that are compatible with the full exercise and enjoyment of the public uses to which the property has been devoted.

Department of Health: West Virginia State Department of Health and Human Resources.

Developer: Any individual, firm, association, syndicate, partnership, corporation, trust or any other legal entity or agent thereof proceeding under this Ordinance to affect a Land Development for himself or another. The term Developer is intended to include the term Subdivider and is frequently referred to as the Applicant.

Drainage: Any ditch, gutter, pipe, culvert, storm water management facility, storm sewer or other structure designed, intended, or constructed for the purpose of diverting diffused waters from or carrying surface waters off streets, public rights-of-way, parks, lots, recreational areas, or any part of any Land Development or contiguous land areas.

Drainage Plan: A plan showing the proposed and existing drainage conditions as described by grades, contours and topography with proposed methods and facilities to collect control and convey said drainage.

Driveway: A minor vehicular access providing ingress/egress between a street and parking area or garage within a lot or property.

Duplex: One (1) of two (2) buildings, arranged or designed as dwellings, located on abutting walls without openings and with each building having a separate lot.

Dwelling: Any building which contains one (1) or more "Dwelling Units" used, intended, or designed to be built, used, rented, leased, let or hired out to be occupied, or which are occupied for living purposes.

Dwelling Unit: Living quarters consisting of one (1) or more rooms arranged for the use of one (1) or more individuals living as an independent housekeeping unit, with cooking, living, sleeping and sanitary facilities

Easement, Right-of-way or Restrictive: A right and privilege a person has to use the lands of another for a specific purpose which is distinct and separate from the ownership of the soil itself.

Erosion: The wearing away of topsoil and surface materials by the action of natural elements or by conditions imposed by human activities such as cutting, clearing or grading.

Factory Built Homes: Many types of structures are built in the factory and designed for long-term residential use. In the case of manufactured and modular homes, units are built in a factory, transported to the site and installed. In panelized and pre-cut homes, essentially flat subassemblies (factory-built panels or factory-cut building materials) are transported to the site and assembled. The different types of factory - built housing can be summarized as follows:

> Manufactured Homes: See Manufactured Home.
>
> Modular Homes: These factory-built homes are built to the state, local or regional code where the home will be located. Modules are transported to the site and installed.
>
> Panelized Homes: These are factory-built homes in which panels - a whole wall with windows, doors, wiring and outside siding - is transported to the site and assembled. The homes must meet state or local building codes where they are sited.
>
> Pre-Cut Homes: This is the name for factory-built housing in which building materials are factory-cut to design specifications, transported to the site and assembled. Pre-cut homes include kit, log and dome homes. These homes must meet local, state or regional building codes.
>
> Mobile Homes: This is the term used for manufactured homes produced prior to June 15, 1976, when the HUD Code went into effect.

Factory Built/Manufactured Home Rental Community: A parcel of land under single or common ownership upon which three (3) or more factory-built homes are located on a continual, non-recreational basis together with any structure, equipment, road or facility intended for use incidental to the occupancy of the factory-built homes, but does not include premises used solely for storage or display of uninhabited factory-built homes, or premises occupied solely by a landowner and members of his family.

Factory Built Home Stand: That part of a factory built home which has been reserved for the placement of the factory built home, appurtenant structures or additions.

Family, Immediate: An immediate family shall include; grandparents, parents, husband, wife, children (natural or adopted), grandchildren and siblings.

Family Transfer: The subdivision of land solely for transfer to a member or members

of the immediate family of the owner of the lot of record. A maximum of one (1) lot per family member, per parcel, is allowed and lots shall not be further subdivided without going through the Major Subdivision process. Lots shall be held by the family member for a period of not less than five (5) years. **(Amended January 10, 2013)**

Floodplain: Any land area susceptible to being inundated by water from any source. A general and temporary condition of partial or complete inundation of normally dry land areas from: (1) the overflow of inland or tidal waters, (2) the unusual and rapid accumulation or runoff of surface waters from any source.

Frontage: The horizontal or curvilinear distance measured along the street right-of-way line upon which a lot abuts.

Grading: Any act by which soil is cleared, stripped, stock piled, excavated, scarified, filled or any combination thereof.

Gross Density: Total number of dwelling units divided by the gross area of a property in a Land Development Plan.

Gross Floor Area: The floor area within the inside perimeter of the exterior walls of the building, exclusive of vent shafts and courts, without deduction for corridors, stairways, closets, the thickness of the interior wall, columns or other features. **(Added January 10, 2013)**

Group Home: See group residential facility.

Groundwater Protection Plan (GPP): A mandatory document required by the West Virginia Department of Environmental Protection (WVDEP) Groundwater Program for the operation and maintenance of all permanent stormwater management structures.

Guest Residence: A single-family residence, in addition to the primary, residence under common ownership and on the same lot with the primary residence and having approval from all appropriate agencies.

Habitable Square Footage: The sum of the floor areas of a dwelling unit as measured to the outside surfaces of exterior walls and including all rooms used for habitation, such as living room, dining room, kitchen, bedroom, bathroom, closets, hallways, stairways, but not including cellars or attics, or service rooms or areas, such as utility rooms, nor unheated areas such as enclosed porches.

Hammerhead Turnaround: A "T" shaped three-point turnaround space.

Holder: As defined by West Virginia Code Section 3, Article 12, Chapter 20, a holder is

1. a governmental body empowered to hold an interest in real estate; or

2. a charitable corporation, association or trust exempt from taxation pursuant to Section 501(c) of the Internal Revenue Code, the purposes or powers of which include protecting the natural, scenic, agricultural or open space values of real property; assuring its availability for agricultural, forest, recreational or open space use, or protecting its natural resources or wildlife.

Hydrogeologic Testing: an evaluation of groundwater quantity and quality and the potential effects that a proposed land development may have on water resources. The evaluation is based on both on-site hydrogeologic testing and existing background information.

Improvements: Any additions to the natural state of the land which increase its value or utility, including pavements, curbs, gutters, sidewalks, crosswalks, water mains, sanitary and storm sewers, landscaping and other appropriate facilities or plantings.

Impervious Surface: A surface that does not absorb water, transmit or allow water to percolate through it.

Incorporated Areas: Areas within Berkeley County that are governed by municipal corporations under Chapter 8 of the West Virginia Code.

Industrial Development: Any development of a use which would include but not be limited to any manufacturing process, material processing, warehousing, research and testing laboratories, product distribution centers, woodworking shops, furniture assembly, machine shops, recycling centers and uses of a similar nature.

Karst: A type of topography that forms as the result of solutional weathering of limestone, dolostone, and/or gypsum. Karst is characterized by soils of highly variable thickness, bedrock exposures, caves, sinkholes, sinking streams, large springs and rapid groundwater movement.

Land Development: The development of one (1) or more lots, tracts or parcels of land by any means and for any purpose, but does not include easements, rights-of-way or construction of private roads for extraction, harvesting or transporting of natural resources, or areas where the disturbance is less than five thousand (5,000) square feet.

Location Map: A drawing at a reduced scale which shows legibly, by dimension and/or other means, enough area beyond the bounds of the proposed land development to locate and orient the land development in Berkeley County and the relationship of the site to the community facilities which serve or influence the

property.

Lot: A portion of a subdivision or other parcel of land legally described or delineated as a unit.

Lot Area: The area of a lot bounded by the front, side and rear lot lines, excluding any area within a street right-of-way, future street right-of-way or floodplain, but including the area of any easement.

Lot, Corner: A lot at the junction of streets abutting on two (2) or more of these intersecting streets. The interior angle at the intersection must be less than 135 degrees to be designated a corner lot.

Lot Depth: The average distance from the street line to the rear lot line or, in the case of a triangular lot, the intersection of two (2) side lot lines.

Lot, Double Frontage: A lot whose front and rear property lines abut on streets.

Lot Line: A line dividing one (1) lot from another or from a street or other public place.

Lot, Residual: The remaining portion of the parent tract of the subdivided land.

Lot Triangular: A lot having three (3) lot lines, but which does not qualify as a corner lot.

Lot Width: The horizontal distance between the side lines of a lot measured at right angles to its depth at the minimum required building setback line.

Lot Width, Minimum: The required minimum lot width at the front building setback line.

Manufactured Home: Manufactured home means a structure, transportable in one or more sections, which in the traveling mode is eight (8) body feet (2438 body mm) or more in width or forty (40) body feet (14,192 body mm) or more in length, or, when erected on site, is three hundred and twenty (320) or more square feet (sq. ft.), and which is built on a permanent chassis and designed to be used as a dwelling with or without a permanent foundation when connected to the required utilities and includes the plumbing, heating, air-conditioning and electrical systems contained therein; except that such term shall include any structure which meets all the requirements of this paragraph except the size requirements and with respect to which the manufacturer voluntarily files a certification required by the secretary (HUD) and complies with the standards established under this title. For mobile homes built prior to June 15, 1976, a label certifying compliance to the Standard for Mobile Homes, NfiPA 501, in effect at the time of manufacture is required. For the purpose of these provisions, a mobile home shall be considered a manufactured home.

Metes and Bounds: A method of describing the boundaries of land by courses and distances.

Monument: A stone or concrete marker placed in the ground for the purpose of delineating the survey of a subdivision, the boundaries of a political subdivision, or to facilitate a geographic information system.

Multi-Family Dwelling: A building designed, occupied or used by three (3) or more families living independently of each other, wherein each dwelling unit or apartment shall contain private bath and kitchen facilities; including apartment houses.

NPDES Permit: The National Pollutant Discharge Elimination System Permit, part of the Federal Clean Water Act, 33 U.S.C. ' 1251, et seq. and West Virginia Code Chapter 22, Articles 11 and 12. This permit is normally administered by the state environmental agency, in this case, the West Virginia Department of Environmental Protection and is required when land disturbance from grading, excavating or construction exceeds the acreage specified under state law.

Official Submission Date: the date upon which an applicant submits a subdivision/land development final plan.

Open Space: Property used in order to preserve natural features or scenic qualities, or as developed for recreational use. Such property may be held privately accruing to the benefit of the property owner(s); or may be held by the County or agency of the County for public use such as parks or other passive/active recreation areas. Property subject to a conservation easement held by the Berkeley County Farmland Protection Board shall be considered privately held open space unless a fee simple interest in the property has been acquired or donated to such Board.

Owner: Any individual, firm, association, syndicate, partnership, corporation, trust or other legal entity having sufficient proprietary interest in the land sought to be subdivided or developed to commence and to maintain proceedings to subdivide or develop the same under these regulations.

Parcel: A piece of land which can be owned, sold, and developed. Parcels have legal descriptions which not only describe their boundaries but also contain information concerning rights and interests.

Panhandle lots: A lot set behind a row of lots along a roadway with access to the roadway via a narrow access strip which is included as part of the lot, giving the lot the appearance of a “panhandle”, or “flagpole”.

Person: Any individual, firm, association, syndicate, partnership, corporation, trust, or other legal entity recognized by law as subject to rights and duties set forth in the Berkeley Subdivision Development Regulations.

Plan: A description for the development of land containing written and graphical information.

Planned Unit Development: A planned unit development for purposes of this Ordinance shall be defined as a mixed-use community, which utilizes one (1) or more of the below housing options in combination with at least one (1) of the Commercial or Recreational amenities. **(Amended January 10, 2013)**

1. Single-family detached housing
2. Single-family attached housing
3. Multi-family housing
4. Commercial
5. Recreational amenities such as golf courses, swimming pools, tennis courts, or other major recreational facilities, exclusive of small neighborhood play areas.

Planning Commission: The Planning Commission of Berkeley County, West Virginia.

Plat: The map, drawing, or chart on which the developer's plan or layout of a land development is shown, indicating the location and boundaries of individual properties and which is submitted to the Planning Commission for approval as part of a land development plan.

Plat, Final: The final map, drawing, or chart, based upon the advancement Preliminary Plan, in which the developer's plan is submitted to the Planning Commission for final approval and which, if approved, shall be recorded in the Office of the Clerk of the County ~~Commission~~ Council in accordance with Chapter 39, Article 1, Section 13, of West Virginia Code, 1931, as amended.

Plat, Preliminary: The preliminary map, drawing, or chart, on which the layout and design of a proposed land development, is shown and which is submitted to the Planning Commission for consideration and advancement as part of a preliminary plan.

Plat, Sketch: An initial map, drawing, or chart indicating existing features of a parcel or tract of land and its surroundings and the general layout of the proposed land development in sufficient detail to allow discussion and comment at a public hearing, but not be presented for final or binding approval.

Private Recreational Facilities: Existing, planned or proposed parks, playgrounds, or other passive/active recreational areas or facilities operated by a person for use by either the general public or private individuals, on either a profit or non-profit basis

Public Recreational Facilities: Existing, planned or proposed parks, playgrounds and other public lands and buildings of the County or land or improvements intended

for ownership and use in common by members of the homeowners association of a given residential subdivision development.

Public Sewer: a physical, water-carried system of pipes, pumps and tankage designed to collect, convey and/or treat human waste from twenty-five (25) or more dwelling units or service of fewer than twenty-five (25) lots as approved by the BCPSSD.

Public Water: Any water system, which regularly supplies or offers to supply piped water to fifteen (15) or more service connections, or service of fewer than fifteen (15) lots or less as approved by the BCPSSD. A single private well, supplying two or fewer dwelling units, is not considered public water for the purpose of this Ordinance.

Quadruplex Dwelling: One (1) of four (4) buildings, arranged or designed as dwellings, located on abutting walls without openings and with each building having a separate lot, with minimum dimensions required by district regulations.

Residue: See Lot, Residue

Right-of-way Line: See Street Line

Riparian Zone: The lands adjacent to streams where vegetation is strongly influenced by the presence of water. The land and vegetation within and directly adjacent to all surface water bodies including, but not limited to lakes, ponds, reservoirs, perennial and intermittent steams, up to and including their point of origin. **(Added January 10, 2013)**

Roadway: The portion of a street right-of-way, which is paved, improved, designated or intended for vehicular traffic.

Sensitive Areas: Areas requiring special attention when being developed due to characteristics such as but not limited to:

1. Severe slope
2. Floodplain area
3. Wetlands
4. Significant Karst features

Severe Slopes: Slopes that are greater than 1 ½' horizontal to 1' vertical.

Single-Family Attached Dwelling: A duplex, triplex, quadruplex, or townhouse dwelling unit.

Single Family Detached Dwelling: A residential dwelling unit designed for and occupied

by one (1) family only and not structurally connected or attached to any other dwelling.

Setback Line: The line within a property defining the required minimum distance between any structure and an adjacent right-of-way or property line, also known as building setback line.

Sewage Facility: Any sewer, sewage system, sewage treatment works or part thereof, designed, intended, or constructed for the collection, conveyance, treatment, or disposal of waste including industrial waste.

Significant Karst Feature: Sinkholes, closed depression, spring, sinking stream, or cave entrance in an area underlain by limestone, dolostone, or gypsum geology.

Sinkhole or sink: A depression in the land surface formed by solution or collapse of the earth below which directs surface runoff into the subsurface or to an underground drainage flow. For the purpose of this Ordinance, the dimension of a sinkhole or sink shall include the last closed contour line as shown on the Preliminary Plat.

Stream, Intermittent: A stream which has no flow during sustained periods of no precipitation and which does not support aquatic life whose life history requires residence in flowing waters for a continuous period of at least six (6) months.

Stream, Perennial: A stream identified by well defined banks and natural channels and has continuously flowing water most years. They are usually shown on a USGS topographic map as a solid blue line.

Street: A public road or way for vehicular traffic, whether designated as a street, highway, thoroughfare, parkway, throughway, road, avenue, boulevard, lane, place or however otherwise designated.

Street Line: The dividing line between a street and a lot or land abutting the street; also known as a right-of-way line.

Street Classifications: See Appendix A of this Ordinance.

Structure: Anything constructed, the use of which requires permanent location on the ground or which is attached to something having a permanent location on the ground, but not including fences, sidewalks, driveways, curbs, water and sewer line access points, fire hydrants, postal services, or accessory farm buildings.

Subdivision, Major: The division of a lot, tract, or parcel of land or part thereof into two (2) or more lots, tracts, or parcels of land, including the residue, for the purpose of lease, sale, transfer of ownership, or development simultaneously or at separate times, whether immediate or future, in such a manner as to require provision for a new street or relocated street to provide access to one (1) or more of the lots, tracts,

or parcels so created.

Subdivision, Minor: Is a merger, minor boundary line adjustment, judicial partition, or testamentary transfer.

Subdivision Regulations: The Berkeley County Subdivision Regulations.

Subdivide: To divide tract of land into lots.

Subdivider: See "Developer".

Surety: See Bond.

Testamentary Transfer: A division of real estate by testamentary (will) device.

Townhouse: One (1) of a group of three or more attached single-family dwelling units, separated from each other by continuous vertical party wall(s) without openings for human passage or visibility from basement floor to roof, with no dwelling unit directly above another, and each unit having separate entrances from the outside.

Triplex: One of three (3) buildings, arranged or designed as dwellings, located on abutting walls without openings and with each building having a separate lot.

Underground Injection Control (UIC) Permit: A permit issued by West Virginia Department of Environmental Protection that regulates the subsurface emplacement of fluids.

Utility: Services consumed by the public. Some examples include but are not limited to: electric, natural gas, water, sewer, telephone, etc.

Vested Property Right:

1. A vested property right is a right to undertake and complete the land development. The right is established when the land development plan and plat is approved by the Planning Commission and is only applicable under the terms and conditions of the approved final land development plan and plat.

2. Failure to abide by the terms and conditions of the approved land development plan and plat will result in forfeiture of the right.

3. The vesting period for an approved final land development plan and plat which creates the vested property right is five (5) years from the date of approval of the final land development plan and plat by the Planning Commission.

4. Without limiting the time when rights might otherwise vest, a landowner's

rights vest in a land use or development plan and cannot be affected by any actions of the Planning Commission when the landowner:

a. Obtains or is the beneficiary of a significant affirmative governmental act which remains in effect allowing development of a specific project;

b. Relies in good faith on the significant affirmative governmental act; and

c. Incurs extensive obligations or substantial expenses in diligent pursuit of the specific project in reliance on the significant affirmative governmental act.

Waiver: The negation of compliance with part or all of a provision or provisions of the Berkeley County Subdivision Regulations by a majority vote of the Planning Commission in accordance with the procedures established in Article 12.

Watercourse: A stream of water, river, brook, creek, or channel or ditch for water whether natural or man-made.

Wetlands: Areas that are inundated or saturated by surface or ground water at a frequency and duration sufficient to support, and that under normal circumstances do support, a prevalence of vegetation typically adapted for life in saturated soil conditions, including swamps, marshes, bogs, and similar areas regulated by the US Army Corps of Engineers.

ARTICLE 3 – PROCESSING PROCEDURES

Section 301. General

1. In order to effect timely, orderly and equitable processing of all applications, the procedures set forth herein shall be observed by all Applicants, the Berkeley County Planning Commission, and its staff.

2. Each subsequent revision of the same plan (Sketch, Preliminary or Final) shall be considered a separate submission to the Planning Commission. Revisions to a plan within the context of an ongoing review shall not be considered as a separate submittal.

3. The table 3-1 below indicates the required plan at the different review stages.

Table 3-1

Review Stage	Preliminary/Final Subdivision	Major Subdivision/ Land Development
Sketch Plan	Not Required	Required
Pre-Application Meeting	Not Required	Required
Subdivision/ Land Development Preliminary Plan	N/A	Required*
Subdivision/ Land Development Final Plan	Required	Required*

*In accordance with Section 305.4, a Preliminary Plan may be combined with a Final Plan.

4. Major Land Developments: All major plans, and any subsequent changes, must adhere to the Berkeley County Planning Commission guidelines published as "Standardization of Major Land Development Plan". This

document may be obtained from the Berkeley County Planning Commission staff.

Section 302. Types of Minor Land Development Plans

1. Addition/Mergers

The following note shall be on all lot mergers:

"The ____ acre tract shall be merged into one property with the adjoining tract, Tax Map and Parcel, for the exclusive purpose of increasing the area of the said lot(s). The merged properties shall not be used or sold individually without compliance with prevailing Berkeley County laws and regulations."

2. Family Transfers

All family transfers can be performed if the lots created can be accessed via a non-exclusive right-of-way from the family transfer lot to a WVDOH right-of-way having a minimum twenty-five feet (25) width. The right-of-way may be graveled but shall be paved, in accordance with Appendix A, Manual of Street Standards, if any further subdivisions of the property are created. If an easement is needed, then a waiver will be required to be approved by the Planning Commission. **(Amended January 10, 2013)**

*Note: Only one (1) lot is allowed to be conveyed to any one family member per individual parcel of property. If a 2nd lot is requested for the same family member for the same property, a waiver must be requested of the Planning Commission.

a. A parcel conveyed as a Family Transfer may not be sold to a non-family member for a period of five (5) years from the date of recordation in the Office of the Clerk of the Berkeley County Commission.

b. A Family Transfer plat shall not be further subdivided unless it proceeds through the Major Subdivision Process after the five (5) year period.

c. Family Transfer plats shall include, as a part of the plat, certifications signed by the Grantor as follows:

1. The intent of the Grantor is to transfer the land only to a member of his/her immediate family.

2. A lot, which is created via the family transfer process, may not be conveyed to a non-member of the immediate family for a period of five (5) years from the date of recordation of the plat of record. (This language shall also be included in the deed).

Section 303 Procedure, Major Land Development Plans

1. General Procedure

During the course of the process, the applicant shall:

a. submit a sketch plan;

b. participate in a public hearing before the Planning Commission to present the sketch plan and;

c. submit a preliminary plan for review and advancement to final plan and, subsequently, a final plan;

d. Participate in a public hearing before the Planning Commission to present final plan for approval;

e. The Planning Commission, having received all comments from the developer, the public and Planning Commission Staff will approve or disapprove the final plan based on the requirements of this Ordinance.

Section 304. Sketch Plan Review and Comment

The preparation and submission of a sketch plan and written supplementary information is required for all major land developments, including planned unit developments.

Section 304.1. Purpose

The submission of a sketch plan and the written supplementary information will assure the applicant:

a. That Planning Commission Staff has the proper visual concept of this proposed project;

b. That there is clear understanding as to the information regarding the proposed project, the site and its use;

c. That the proposed project is submitted with information sufficient to provide an accurate evaluation by not only the Planning Commission and its Staff but also by the general public.

Section 304.2. Sketch Plan Submittal

a. Within fourteen (14) days of Sketch Plan submittal, the proposal shall be reviewed by the Planning Commission Staff and a letter shall be provided to the applicant confirming any comments or recommendations issued by staff with regards to the proposed development and an evaluation as to its completeness. A sketch plan meeting can be held with the staff. The purpose of the meeting would be to inform the applicant of what is to be expected procedurally; comment on the general advisability and to discuss development ideas and proposals of the plan, its conformity to this Ordinance and its administrative completeness (i.e. containing all items required in Section 401.3).

b. If comments exist from the letter and/or meeting, the applicant shall address these comments when revising the sketch plan. A revised sketch plan shall be re-submitted to the Planning Department prior to being forwarded to the Planning Commission for public hearing.

If no comments exist, the initial submittal will be forwarded to the Planning Commission for public hearing.

Section 304.3. Public Hearing

a. The applicant shall submit a minimum of two (2) originals and one (1) electronic media formatted copy, as specified in Section 403.2.c of the complete sketch plan and written supplementary information in accordance with Section 401.3; the date of such submission shall be considered the date of official submission. The submission shall be on forms provided by the Planning Commission Staff and accompanied by the required fees established in this Ordinance. **(Amended January 10, 2013)**

b. A public hearing shall be scheduled within thirty (30) days of the date in which the sketch plan is determined to be complete. The

purpose of this public hearing is to receive staff comment, review the sketch plan with any revisions and, in particular, to receive input from the developer and the general public. At the conclusion of the public hearing, the Planning Commission may remand the plan back to the applicant with comment. The Planning Commission Staff shall officially notify the applicant in writing within fourteen (14) days of the conclusion of the hearing confirming any comments or recommendations issued by the Planning Commission. The applicant may address these comments and recommendations in the subsequent Preliminary Plan.

c. The Planning Commission shall cause a public notice of the date, time and place of the public hearing to be published in a local newspaper within at least fourteen (14) days prior to the public hearing. The applicant/developer will also be notified by the Planning Department to pick up a public hearing sign accompanied by the required fees established in this Ordinance... The applicant/developer shall post this sign at least 14 days prior to the public hearing as close to the road as possible as well as in a location that is clearly visible. Once the sign has been posted, the applicant/developer shall contact the Planning Department for an inspection of the sign posting and once inspected, the inspection date and a photograph of the sign shall be placed in the project file.

Section 305. Preliminary Plan Review and Advancement

The preparation and submission of a Preliminary Plan, together with other supplementary material, are required for Major Land Developments, including Planned Unit Developments.

Section 305.1. Purpose

The purpose of the Preliminary Plan is to request review and advancement from the Planning Commission on matters relating to detailed engineering design and layout of all proposed improvements in order to minimize changes and revisions before the Final Plan is submitted for review and disposition.

Section 305.2. Procedure-Preliminary Plan

a. Based on conclusions reached and information provided in the sketch plan submittal and the public hearing regarding the general objectives of the proposed project as well as its conformity to this Ordinance, the applicant shall prepare a Preliminary Plan, together with other supplementary material as specified in Section 402.2 of this Ordinance.

b. The applicant shall submit to the Planning Commission a written request for review, including the required copies of the Preliminary Plan and supporting documents, and one electronic media formatted copy as specified in Section 403.2.c on forms provided by the Planning Commission Staff, and accompanied by the required fees established in this ordinance.

c. Based on the type, size, and location of the proposed project, and other agencies' requirements, the Planning Commission shall require approvals from the agencies listed below**,** as the project may require:

West Virginia Bureau of Health, Environmental Engineering Division
West Virginia Division of Highways******Applicant must show dated proof of filing application to the DOH, in the event an agreement/bonding requirement is needed for proposed improvements.** If no agreement/improvements are required, then the DOH permit/approval is required.
Public Service Districts, Water and Sewer
Berkeley County Health Department
NPDES approval authority**Applicant must show dated proof of filing application to the DEP. **
GPP approval authority
Central Dispatch,
West Virginia DEP
US Army Corps of Engineers
Berkeley County Engineering Department
West Virginia Public Service Commission
And others as may be required.

d. Within seven (7) days of receipt of the written request along with the required number of copies of the Preliminary Plan and the required supplementary material, the Planning Commission Staff shall review the plan and notify the applicant as to its completeness.

Should the plan be adjudged by the Planning Commission Staff to be administratively incomplete, i.e., not containing all elements required by Section 402.2, the applicant shall be so notified and the plan shall be considered not to have been officially submitted.

e. Within forty-five (45) days of official submission and receipt of all approvals including those from outside agencies, the Planning

Commission at a regularly scheduled meeting shall consider the plan. In determining whether advancement should be given to the Preliminary Plan, the Planning Commission at its public meeting shall be guided by the design standards set forth in this Ordinance. Particular attention shall be given to Planning Commission Staff comment, previous public comment, but especially the arrangement, location and width of streets and their relation to the topography; storm water management; water supply; sewage and solid waste disposal; drainage; erosion and sediment control; lot sizes and arrangements; the "Statement of Legislative Intent" and the "Statement of Purpose" of this ordinance.

f. Following the Planning Commission's review of the Preliminary Plan and other materials required by these regulations, including comments issued by or approvals required by other departments and agencies if available, the Planning Commission shall at the public meeting, or no more than fourteen (14) days after the public meeting advance the plan or remand it back to the applicant for revisions. If remanded, the Planning Commission shall express its reasons for remanding in writing and shall cite the section(s) of the Ordinance which form the basis for remanding back to the applicant.

g. In those instances in which an applicant cannot resolve a staff comment, the issue may be brought before the Planning Commission for review and resolution, at the applicant's discretion.

Section 305.3. Effect of Preliminary Plan Advancement

Advancement of a Preliminary Plan shall not constitute approval of the Final Plan. Rather, it shall be deemed as advancement to final plan review stage as a guide to the preparation of the Final Plan application. Upon fulfillment of the requirements of these regulations and satisfaction of the Preliminary Plan advancement, the Final Plan may be submitted for determination by the Planning Commission.

Advancement of a Preliminary Plan by the Planning Commission shall have the following meaning:

From the date of the Preliminary Plan advancement, the Preliminary Plan shall be valid for a period of three (3) years.

a. The applicant may seek extensions of the Preliminary Plan advancement in one (1) year increments, not to exceed two (2) in

number.

b. The Planning Commission in reviewing the extensions shall take into consideration the status of the application from outside agencies and changes within the vicinity to better accommodate a changed level of service.

c. The terms and conditions, including but not limited to street layout, lot size and setbacks, and improvements on which such preliminary advancement was granted will not be changed, unless requested by the Applicant and agreed to by the Planning Commission;

d. The applicant may submit on or before the expiration date of such Preliminary advancement, the whole or any part of said subdivision for final determination in accordance with the provisions of this Ordinance, provided that if the applicant elects to submit only a part of said subdivision for final approval, the applicant shall first make written notification to the Planning Commission indicating specifically the part or parts for which final approval is requested.

e. A Plan Change must be submitted for public hearing under the following circumstances:

1) A change in the number of lots, (increase or decrease in the #); lot sizes; roads; storm water management areas; changes in open space areas or percentages; parking lot areas/lots; and any increase in impervious surfaces affecting the Preliminary Plan that was recommended for advancement to Final Plan.

2) A change requested subsequent to the transfer of any lot(s) within the subdivision. **(Added January 10, 2013)**

Administrative plan changes that do not require a public hearing are as follows: Boundary line or lot line adjustments; road name changes, and decreases in impervious surfaces.

Section 305.4 <u>Procedure-Simultaneous Preliminary/Final Plan</u>

1. Where lots are greater than two (2) acres in size and have frontage on a WVDOH road, and no improvements are needed, the developer may submit a combined Preliminary/Final Plan to be forwarded to the Planning Commission.

2. Applicant Procedure

   a. The application for Preliminary/Final Plan review and determination shall be on forms provided by the Planning Commission Staff accompanied by copies of all applications for permits from WVDOH and utilities, as well as the required final plan fees established in this ordinance. Note: all applicable permits shall be issued prior to final approval. **(Amended January 10, 2013)**

   b. Should the plan receive approval, the applicant shall record such plan in the Office of the Clerk of the County Council in accordance with the appropriate provisions of the law within ninety (90) days of such approval. In the event that the final plan is not filed within the appropriate time, the application shall be considered withdrawn and any previous approval or modifications shall be considered lapsed.

3. Planning Staff Procedure

   a. The application, plans, and supporting documents shall be filed with the Planning Commission Staff, which must, within seven (7) days after submission if the applicant desires, meet with the applicant to discuss the criteria used to classify the proposal as preliminary/final plan.

   b. Within ten (10) days after submission of the Preliminary/Final Plan, the Planning Commission Staff shall notify the applicant in writing whether of not the submission has been classified a minor land development.

   c. Within ten (10) days of the date that the plan was classified a Preliminary/Final Plan; the Planning Commission Staff shall approve or deny the plan and so notify the applicant in writing within fourteen (14) days of the date of the decision.

4. Planning Commission Denial/Appeal Procedure

   a. In the instance of a Preliminary/Final Plan denied by staff, the applicant may appeal the decision to the Planning Commission within thirty (30) days of the date of the Letter of Denial.

b. Upon receipt of the Request for Appeal, the request shall be placed on an agenda within thirty (30) days from the Receipt for Request.

c. If the Planning Commission denies the plan, it shall set forth the reasons in its own records and so notify the applicant in writing within fourteen (14) days of the date of the decision.

Section 306. Final Plan Review and Approval

The preparation and submission of a final plan, together with supporting documents and data, are required for all land developments including planned unit developments.

Section 306.1. Purpose

The purpose of the final plan is to require formal approval by the Berkeley County Planning Commission before all plans of all subdivisions are recorded in the Office of the Clerk of the County Council and/or prior to the construction of improvements.

Section 306.2. Procedure, Major Land Developments

a. General Procedure

1. The final plan shall conform substantially to the preliminary plan as previously advanced by the Planning Commission. If substantive changes have been made as adjudged by the Planning Commission Staff, the plan shall be considered a revised preliminary plan, which must be re-advanced by the Planning Commission and the participating agencies indicated in Section 305.2.c.

2. The applicant may submit the final plan by phase or in its entirety.

3. The final plan and supporting documents shall comply with the provisions of this Ordinance.

4. The final plan shall be submitted to the Planning Commission within three years (3) after advancement of the preliminary plan. Otherwise, such advancement shall become null and void unless an extension of time for the preliminary plan is applied for by the applicant and granted by the Planning Commission.

b. Applicant Procedure

1. The application for final plan determination shall be on forms provided by the Planning Commission Staff, accompanied by the required fees established in this Ordinance.

2. The applicant shall submit to the Planning Commission a written application, including the required copies of the Final Plan and supporting documents, and one electronic media formatted copy as specified in Section 403.1.

3. The applicant shall submit permits and/or letters of approval from the agencies listed below, as the project may require:

   West Virginia Bureau of Health, Environmental Engineering Division
   West Virginia Division of Highways
   Public Service Districts, Water and Sewer
   Berkeley County Health Department
   NPDES approval authority
   GPP approval authority
   Central Dispatch,
   West Virginia DEP
   US Army Corps of Engineers
   Berkeley County Engineering Department
   West Virginia Public Service Commission
   and others as may be required.

4. Upon the Planning Commission staff determining that all the final plat requirements have been met, the required copies and a Mylar shall be submitted to the Planning Commission for a Final Plan determination meeting date. **(Amended January 10, 2013)**

c. Planning Commission Procedure-Approval of Final Plan

1. Submittal of application request for determination-Application for determination is submitted by the applicant/developer.

2. Plan Determination Meeting-

   a. At the 1st regular meeting following submittal of the application, the Planning Commission shall find that

the application meets the requirements of the Ordinance and is therefore complete, or find that the application does not meet the requirements of the Ordinance and is therefore not complete.

b. If complete, the Planning Commission sets the date, time and place for the public hearing and meeting to vote on the completed application.

c. Pursuant to Chapter 8A, Article 5, Section 8(c), of the West Virginia Code, 2004, as amended, the Planning Commission shall conduct a public hearing at a regularly scheduled public meeting within forty-five (45) days of the date of official submission of said final plan. The purpose of this public hearing is to receive staff comment, review the final plan with any revisions and, in particular, to take testimony from the developer and general public. At the conclusion of the public hearing, the Planning Commission shall remand the plan back to the applicant with comment or approve the final plan.

d. The Planning Commission staff, at least twenty-one (21) calendar days before the public hearing, shall cause a notice of the hearing to be published in a local newspaper. The applicant/developer will also be notified by the Planning Department to pick up a public hearing sign accompanied by the required fees established in this Ordinance. The applicant/developer shall post this sign at least 14 days prior to the public hearing as close to the road as possible as well as in a location that is clearly visible. Once the sign has been posted, the applicant/developer shall contact the Planning Department for an inspection of the sign posting and once inspected, the inspection date and a photograph of the sign shall be placed in the project file.

e. Within fourteen (14) days after the Public Hearing, or immediately following the hearing's conclusion, the Planning Commission shall approve, approve with conditions, deny or hold the application.

f. If the Planning Commission approves the plan, the plan shall be signed by a commissioner and the

developer notified. **(Amended January 10, 2013)**

g. If the plan is denied, the developer may make new application to the Planning Commission staff for complete review and a new public hearing.

h. If the plan is held for additional information, the Planning Commission shall notify the applicant of the need for such information.

i. If the plan is approved with conditions, at such time as the conditions have been met, the applicant shall submit a request to the Planning Department to be placed on the next available agenda for final plan approval.

3. Recordation-

a. Following approval and meeting the conditions set by the Planning Commission, the subdivision or land development unit shall be recorded by the applicant in the Office of the Clerk of the County Council within five (5) years of the date of approval. In the event that the Final Plan is not filed within the appropriate period of time, the Final Plan shall be considered withdrawn and any previous approval or modification of the Final Plan shall be considered null and void. If the development is located in more than one county, recordation shall be in the county of initial land development and subsequently in other counties where the development is also located. Receipt of recordation shall be provided to the planning commission during bond reduction and releases, and shall be provided as part of the supplemental plat process, needed to issue a use and occupancy permit. **(Amended January 10, 2013)**

ARTICLE 4 - PLAN REQUIREMENTS

Section 401. Sketch Plan

The Applicant shall prepare a sketch plat and written supplementary information for review. The sketch plan shall include the information described below.

Section 401.1. General Information

General information, in narrative form, which describes the overall purpose of the proposed development and its specific uses and its consistency with the County Comprehensive Plan, shall be provided by the Applicant to supplement the information provided on the actual sketch plat drawings. This information also shall include data on soil types, geological information, community facilities and utilities and information describing the land development proposal. The Applicant, if desired, may propose a phasing plan, with estimated time frames for each proposed phase of development, but in every case shall estimate the ultimate build-out date. The sketch plan shall also provide information on provisions for parking for commercial and multi-family development, including the number of required and proposed parking spaces. In addition, for all developments information on proposed road types, total acreage of site and the amount of acreage to be developed as lots, as open space and as streets; and information on the historic use of the site, especially if previous land uses may tend to impact the site's development potential, is required. In addition, one (1) electronic media formatted copy shall be required. Please reference the Berkeley County Digital Data Submission Standards Policy.

Section 401.2. Location Map

A location map, at a scale of no less than six hundred feet (600') to one inch (1"), shall show the relationship of the proposed land development to existing community facilities, which serve or influence it. These facilities shall include public road systems, public schools, retail and commercial areas, County and State parks, and any other public or private amenities of note, which are located in proximity to the proposed development. The location map shall be drawn at a scale, which allows information such as State route numbers and local road names, location of local trails, local landmark names, and all other geographic identifiers to be easily read and interpreted.

Section 401.3. Sketch Plat

The sketch plat shall include the following:

1. Proposed layout of streets.

2. Total number of lots, configuration of lots and lot sizes.

3. Name, location and width of right-of-way of adjacent roads

4. Name and location of any adjacent subdivisions whether approved or in progress, (provided by the Berkeley County Planning Staff, after 1st submission if needed), and Berkeley County Planning Commission File # for each.

5. Tax map information, current land use and property owners for all adjacent properties, north arrow with the basis of north.

6. Location of proposed storm water management facilities and type of facility.

7. Types of utilities proposed

8. Name and address of preparer

9. Topography at a minimum of twenty foot (20') intervals and conditions including soil types, floodplain lines, wetlands and other natural features, as shown on the USGS Quadrangle maps or other mapping products for the site and one-hundred feet (100') from the site boundary. **(Amended January 10, 2013)**

10. Location and description of any proposed recreational or open space uses

11. Existing sensitive areas which may impact the site's development potential.

12. Existing built features and infrastructure and their proposed eventual disposition (i.e., to be razed, removed, maintained or converted to another use).

13. Preliminary calculations of impervious coverage, density, area of non-residential uses, and parking requirements.

14. The proposed name of the land development, which shall not duplicate or closely approximate the name of any other land development in the County or its close proximity.

15. Developments that propose more than fifteen (15) dwelling units, shall obtain and complete a "Planning Commission Public School Impact Form", which is available at the Planning Commission office.

16. Average Daily Traffic estimates (ADT) at each proposed point of access.

17. Prospective street layout providing access to the remainder of the property when the land development covers only part of the owner's entire holdings.

18. Statement on the plat whether the property lies within a one hundred (100) year floodplain, (Appendix C) including Flood Insurance Rate Map (FIRM) map panel, number and date.

19. A completed Environmental Impact Checklist, Appendix C contained herein.

Section 401.4. Environmental Considerations:

The Sketch Plat shall identify known environmental features, such as wetlands (as per National Wetlands Inventory Maps), wet and intermittent streams, forested areas, sink holes, caves, springs, severe slopes, soil types and the general location of any other significant geological or other feature.

If development is proposed on a site which was previously used for an activity which may pose a potential public health risk due to the presence of residual toxins, chemical contaminants or heavy metals such as arsenic, then the Sketch Plat shall state that the development of the site will comply with all applicable guidelines and standards for the reuse and redevelopment of environmentally compromised sites, as established by the West Virginia Department of Environmental Protection, The Federal Environmental Protection Agency or any other governing state or federal authority.

As per the West Virginia Department of Environmental Protection, the Applicant is cautioned that any property having an agricultural history is subject to enhanced scrutiny of its environmental suitability for residential or commercial redevelopment. The Department of Environmental Protection advises that the Applicant exercise all due diligence in researching land use history of property proposed for redevelopment, and advises that "due diligence" shall be interpreted to mean the compilation of information relating to past uses of a property as far back in time as the existence of written documentation shall allow.

Section 402. Preliminary Plat

Section 402.1 General

The preliminary plat shall be submitted by the Applicant on durable paper and shall be clear, legible and in accordance with the Berkeley County "Standardization of Major Subdivision/Land Development Plans". The scale shall be one hundred feet

(100') or less to the inch and the size of the sheets shall be twenty-four (24) by thirty-six inches (36"), including a one and one half inch (1 ½") margin for binding along the left edge. When more than one sheet is required, an index sheet of the same size shall be submitted showing the entire subdivision drawn to scale. The preliminary plat shall be labeled "PRELIMINARY PLAT" in large letters. In addition, one (1) electronic media formatted copy shall be required. Please reference the Berkeley County Digital Data Submission Standards Policy.

Section 402.2 Required Information

The preliminary plat shall show or be accompanied by the following information:

a. General

1. Location map at a scale of no less than six hundred feet (600') to one inch (1") indicating the location of the property with respect to surrounding properties and streets. The location map must be drawn at a scale which allows local street names, landmarks, and other geographic information to be easily read and understood. The map shall show all streets and property within one thousand feet (1000') of the exterior property of the development site.

2. The names of all adjoining property owners and current land uses with deed reference and tax map description, and/or the names and locations of any adjacent residential subdivisions, current or proposed, with the Berkeley County Planning Commission File #.

3. The proposed name of the land development, which shall not duplicate or closely approximate the name of any other land development in the County or its close proximity.4. The name and address of the owner or owners of the land to be subdivided or developed, and the name and address of the Applicant, if different from the owner.

5. A letter from the owner, if different from the Applicant, authorizing the Applicant to act as his agent with full authority.

6. The name and address of the registered engineer, land surveyor certified in the State of West Virginia responsible for the preparation of the plat, and the name and address of the registered engineer certified in the State of West Virginia responsible for the preparation of the plans for the required improvements.

7. North arrow (with basis of north), scale and date.

8. Title block; location of tract by tax district, map, parcel, deed book and page number.

9. A surveyor's certification block certifying to the exterior property lines of the property being developed.

10. Computation of total area (acreage) of the land development proposed (including all open space, conservation easements, storm water management areas, residue, lot area(s), gross density per acre and rights-of-way).

11. If the Preliminary Plat proposes a phase or section of a larger development, then submit a sheet in the plat set which shows the entire development, including the current phase or section and all existing and future phases or sections.

12. When the preliminary plat under review is a re-plat of a subdivision of record, there shall be shown the following statement on the preliminary plat with the applicable entries made thereon:

    This is a replat of_____
    (name of subdivision)

    recorded on _____, in Plat Book #_____,
    (date of recording)

    Page # _____, owned by _____ at
    (name of owner)

    time of recording.

    _____
    Signature of Present Owner

13. In the case of re-plat of a subdivision of record, dotted or dashed lines shall be used to show the features or locations to be abandoned and solid lines to show the currently proposed features or locations.

14. Date of plat preparation and dates of any subsequent revisions to the plat made during the review process, if any.

15. A completed Engineering Preliminary Plat Checklist, as

provided by the County Engineer and Planning Preliminary Plat Checklist, as provided by the County Planning Commission.

b. Site Data

Site data shall include the following:

1. Subdivision boundaries with distances, including entire area proposed to be subdivided or developed and remainder of the tract in the same ownership; all existing restrictive easements rights-of-way and the purpose for which such easements and rights-of-way have been established; plus any parks, conservation easements or other public open spaces.

2. An "existing features" sheet which shows all built structures on the site, and includes information as to their proposed final disposition. Existing man-made features that may influence the design of the subdivision, such as power transmission towers or power lines, historic areas or features, sewers, water mains, culverts, utility lines, fire hydrants and cemeteries shall be shown. Natural features also shall be shown, including forested areas, wetlands as shown on the National Wetlands Inventory Maps, water features, tree groves, swamps, outstanding topographic features, and sinkholes or depressions. Property rights-of-way and lot lines should be ghosted in the background.

3. Existing topography with two-foot (2') contour intervals. Where the terrain is rugged and hilly and where existing grades are twenty five percent (25%) or greater, ten-foot (10') contour intervals will be permitted in the area where such grades exist. Topography lines for off site improvements shall be shown at two foot (2') contour intervals.

4. Location, widths, and names of all existing streets or alleys on or within one hundred feet (100') of the land development unit site. Recorded but unimproved streets shall be shown with dashed lines, and shall be labeled as "recorded but unimproved rights of way".

5. If the property to be developed is located within the floodplain, in whole or in part, the extent of the one hundred (100) year flood plain within the property and adjoining properties. Additional applicable information as may be required by the County Floodplain Ordinance.

c. Proposed Design and Improvements

1. The layout of all proposed and existing lots, with approximate dimensions and area in square feet for each lot; proposed uses of property.

2. Front, rear and side yard setbacks.

3. The location of proposed buildings, the first floor elevation and the building envelope. For residential structures a composite footprint may be used.

4. Impervious coverage, density and parking calculations.

5. Existing and proposed driveway locations

6. Site dimensions, including the number of linear feet which front on public highways. All proposed street names and locations of street, traffic regulatory signs and ADT shall be shown.

7. Location, width and grade of all proposed streets, typical cross sections including a description of the centerline with distances and curve data shall be shown. Any access point onto a public highway must be approved by the West Virginia Division of Highways.

8. The approximate location, dimensions and area of all property proposed to be dedicated or temporarily reserved for public use, or to be reserved by a blanket covenant for use of all property owners in the land development and conditions for such conveyance or reservation. The location, dimensions, area and purposes of any proposed conservation, open space, or other restrictive easements shall be shown.

9. Where such information is available, proposed public improvements, streets or other major improvements which have been planned by public bodies for future construction on or near the proposed land development unit shall be shown on the plat or site plan.

10. Proposed location of street trees, sidewalks and street lighting standards (if required); all other proposed improvements.

11. Standard Berkeley County and review agency construction details shall be provided.

12. Proposed drainage systems showing the disposition of surface drainage with the following;

    i. Typical cross sections of all proposed storm water management ponds and ditches.

    ii. Drainage easements through onsite and offsite lots.

    iii. Road culvert profiles.

    iv. The location, size and invert elevations of storm sewers and appurtenances thereto shall also be shown.

13. A proposed plan for erosion and sediment control during and after the construction phase shall be required pursuant to the Berkeley County Storm Water Management and Sediment Erosion Control Ordinance.

14. Connections with an existing water supply, if available, or alternative means of supply. If connecting to an existing water supply, show location, size of main, pressure and flow available at the connecting point.

15. Connections with existing sanitary sewer system or other means of sewage collection, treatment and disposal shall be shown. If connecting to an existing system, show location, size, and invert elevations at connecting point.

16. If individual sewer systems are proposed the location of the drainfield, or alternate means of disposal, as approved by the Berkeley County Health Department, State Health Department and WVDEP, if applicable, must be shown. This area shall include the required septic reserve areas. Approval documentation shall be submitted to the Planning Commission for all drain fields.

17. If individual water supply systems are to be provided, the location of the well as being one-hundred feet (100') distant from any septic system and ten feet (10') distant from any property line is required.

18. The location of existing gas lines, fire hydrants, electric and telephone poles, street lights, as well as the recommended and/or required future locations, or easements, of these services.

19. When the Preliminary Plat covers only a part of the owner's entire adjacent holdings, a scaled drawing, with topography and the prospective future street system which would provide access to the owner's adjacent holdings shall be shown. The prospective future street system shall be shown for a minimum distance of two hundred feet (200') beyond the boundary of the proposed Land Development as indicated on the Preliminary Plat.

20. Proposed utility or other rights-of-way or restrictive easements may not cross through any conservation easement protected property held by any holder unless written approval has been granted by the Berkeley County Farmland Protection Board or other administering conservation agency.

21. All grading, including that for individual lots, shall be shown on the Preliminary Plat with existing and proposed contours.

22. Location of existing monuments and proposed new monuments.

23. For applications that require a highway entry permit the Applicant shall submit to the Berkeley County Planning /Engineering Departments which will review the application and make a recommendation to the West Virginia Division of Highways prior to WVDOH submittal. A traffic study shall be required for under any of the following conditions:

    a) When the proposed development is projected to generate one hundred (100) or more trips during the peak generating time for the development.

    b) For smaller developments under one of the following three conditions:

        1) When the proposed new approach is to an intersection already operating at a LOS "D" or worse;
        2) When the developer is requesting a new traffic signal;
        3) When modification of an existing traffic signal are being requested.

    c) An older TIS may need to be updated when the data is more than two years old.

A professional engineer in West Virginia must certify all traffic impact studies. **(Amended January 10, 2013)**

Section 402.3 Hydrogeologic Testing

Hydrogeologic testing as set forth in this document is an evaluation of groundwater quantity and quality and the potential effects that a proposed land development may have on water resources. The evaluation is based on both on-site hydrogeologic testing and existing and readily available information.

Hydrogeologic testing and reports are required and specifically defined for residential subdivisions not served by public water and public sewer with fifteen **(15)** or more lots. Each hydrogeologic test shall be performed by or under the direct supervision of a professional geologist. A report of the evaluation, the Hydrogeologic Report, shall be prepared and signed by the professional geologist and submitted to the County for review. Where not specifically defined in this Section, the methodology used for testing and evaluation shall follow generally accepted professional hydrologic and hydrogeologic practices and standards.

Section 402.3.1 Hydrogeologic Testing Requirements for Subdivisions, fifteen (15) lots or more, not served by Public Water and Public Sewer

A hydrogeologic report for subdivisions will examine the local hydrogeologic conditions and the relationship between the proposed land use and those conditions. The testing will focus on the groundwater quantity and quality as they relate to the requirements of the proposed land development and the potential impacts the subdivision may have on the water resources. A hydrogeologic report is required prior to a preliminary subdivision submission.

Subdivisions not served by public water and public sewer can be divided into two (2) groups based on the type of water supply system; those having a private well on each individual lot and those having community water systems serving two or more lots.

Section 402.4 Water: Home and Business Consumption

This section addresses water for home and business consumption. The intent is to establish: 1) demand levels which satisfy quality of life, 2) requirements for well/pump testing, and 3) procedures to enhance sustainability of this resource.

Definitions of Acronyms

gpm = gallons per minute
gpd = gallons per day
psi = pounds per square inch
ERU= equivalent residential unit
ADD = average daily demand (gallons per day/ERU)
AARn = average annual rainfall under normal conditions
AARd = average annual rainfall under drought conditions
MDD = maximum daily demand (gallons per day/ERU)
PHD = peak hourly demand (gallons per day/ERU)

Standard Units for Berkeley County Applications

AARn for Berkeley County = 39.4 inches/year
AARd for Berkeley County = 19.7 inches/year
ADD = 180 gpd (based on Berkeley County Public Service District (PSD) statistics
MDD = 360 gpd (2 x ADD)

A. Private Wells

1. A private well shall be defined as a well which supplies a single ERU.
2. Each private well must be capable of providing a continuous yield of > 3 gpm.
3. If the well does not yield at the minimum required rate, then the water supply system (i.e. borehole + storage/pressure tank) must provide a reservoir of 360 gallons (equivalent to the regional MDD). In addition, the well must be capable of supplying enough water to refill the reservoir within a twenty-four (24) hour period.

B. Community Wells

1. A community well shall be defined as a well, which supplies more than one ERU.

2. Community well yield shall be determined based on the number of ERUs being supplied. It is critical that the water system source, treatment and storage facilities must be designed such that, together, they provide the MDD for the system based on the number of residences. It is preferable that the system be designed such that the source alone will be able to meet, and preferably exceed, the MDD. This is important, as larger storage tanks, with corresponding residence times of stored water, are more susceptible to water quality issues such as stale water, warm water in the summer, and biological growth. It is notable that that the more a utility relies on storage rather than source to meet the MDD, the longer it will take the utility to replenish the storage once it is depleted. In addition, fire protection authorities generally recommend the ability to replenish fire protection storage within a twenty-four

(24) hour period after it is depleted. To accomplish this, the flow rates must equal or exceed the MDD.

3. The yield for a community well shall be determined by multiplying the number of proposed ERUs to be supplied by the system by the MDD, as shown in the following formula:

Community Well Yield (gpd)=(No. of ERUs)(MDD in gpd)

For example: (No. of ERUs)(MDD) = CYY
(200)(360)=72,000gpd

C. Non-Residential Wells

1. All wells that supply commercial establishments (e.g. agricultural, retail, industrial, recreational, etc.) shall be sized based upon the design engineer's recommendations regarding the specific establishment's water supply requirements. Guidance for the requirements of a specific establishment should be derived from Table 4-1 as follows:

Table 4-1 Guide for Non-Residential Water Demand

Type of Establishment	Water Used (gpd)
Airport (per passenger)	3 - 5
Apartment, multiple family (per resident)	50
Bathhouse (per bather)	10
Boardinghouse (per boarder) Additional kitchen requirements for nonresident boarders	50 10
Camp: Construction, semi permanent (per worker) Day, no meals served (per camper) Luxury (per camper) Resort, day and night, limited plumbing (per camper) Tourist, central bath and toilet facilities (per person)	 50 15 100 - 150 50 35
Cottage, seasonal occupancy (per resident)	50
Club: Country (per resident member) Country (per nonresident member present)	 100 25
Factory (gallons per person per shift)	15 - 35
Highway rest area (per person)	5
Hotel: Private baths (2 persons per room) No private baths (per person)	 50 50

Type of Establishment	Water Used (gpd)
Institution other than hospital (per person) Hospital (per bed)	75 - 125 250 - 400
Lawn and Garden (per 1000 sq. ft.) Assumes 1-inch per day (typical)	600
Laundry, self-serviced (gallons per washing [per customer]	50
Livestock Drinking (per animal): Beef, yearlings Brood Sows, nursing Cattle or Steers Dairy Dry Cows or Heifers Goat or Sheep Hogs/Swine Horse or Mules	 20 6 12 20 15 2 4 12
Livestock Facilities Dairy Sanitation (milk room) Floor Flushing (per 100 sq. ft.) Sanitary Hog Wallow	 500 10 100
Motel: Bath, toilet, and kitchen facilities (per bed space) Bed and toilet (per bed space)	 50 40
Park: Overnight, flush toilets (per camper) Trailer, individual bath units, no sewer connection (per trailer) Trailer, individual baths, connected to sewer (per person)	 25 25 50
Picnic: Bathhouses, showers, and flush toilets (per picnicker) Toilet facilities only (gallons per picnicker)	 20 10
Poultry (per 100 birds): Chicken Ducks Turkeys	 5 - 10 22 10 - 25
Restaurant: Toilet facilities (per patron) No toilet facilities (per patron) Bar and cocktail lounge (additional quantity per patron)	 7 - 10 2-1/2 - 3 2
School:	

Type of Establishment	Water Used (gpd)
Boarding (per pupil)	75 - 100
Day, cafeteria, gymnasiums, and showers (per pupil)	25
Day, cafeteria, no gymnasiums or showers (per pupil)	20
Day, no cafeteria, gymnasiums or showers (per pupil)	15
Service station (per vehicle)	10
Store (per toilet room)	400
Swimming pool (per swimmer)	10
Maintenance (per 100 sq. ft.)	
Theater:	
Drive-in (per car space)	5
Movie (per auditorium seat)	5
Worker:	
Construction (per person per shift)	50
Day (school or offices per person per shift)	15

Source: Adapted from Design and Construction of Small Water Systems: A Guide for Managers, American Water Works Association, 1984, and Planning for an Individual Water System. American Association for Vocational Instructional Materials, 1982.

Section 402.4.2 Well Proving Requirements: Low Density Private Wells

LOW DENSITY PRIVATE WELLS

This material shall apply to all individual residential wells, including private wells in subdivisions where there are less than fifteen (15) lots, or where the lot size is greater than ten (10) acres. Approval of subdivisions will not require wells to be drilled in advance; however a use and occupancy (U & O) permit will not be issued until the well has been approved by the County Health Department and has been shown to meet the requirements of this section of the ordinance.

A. Pumping Test Requirements

1. Prior to the test, the well must be fully developed.
2. Physical or chemical alteration of geologic materials or structures (e.g., hydraulic fracturing, use of explosives, or addition of chemicals) to increase yield will not be permitted.
3. The air-lift test may be conducted whenever water from precipitation is not flowing over the ground surface. A three (3) week delay in testing will be enforced whenever two inches (2”) of rain have been recorded within a ten (10) day period in the location of the well to be tested.
4. Upon the cessation of pumping, the water level shall be measured after every fifteen (15) minutes for the first hour, and then every two (2) hours until ninety percent (90%) of the pre-test static water level is achieved (full recovery). If the well does not fully recover to within ninety percent (90%) of the pre-test static water level after twenty-four (24) hours it will be considered a non-sustainable source of water.
5. In addition if an individual well does not meet the minimum >3 gpm yield requirement as specified in part A of this Section, then the water supply system (i.e. borehole + storage/pressure tank) must provide a reservoir of 360 gallons (equivalent to the regional MDD). In addition, the well must be capable of supplying enough water to refill the reservoir within a 24-hour period.

B. Reporting Requirements

No extraordinary reports will be required for the approval of individual wells other than the completion logs and forms necessary for permitting. Reporting forms shall be obtained from the Berkeley County Engineering Department.

Section 402.4.3 HIGH DENSITY INDIVIDUAL WELLS, SMALL (< 50 GPM) NONRESIDENTIAL WELLS, AND SMALL (<50 GPM) COMMUNITY WELLS

This material shall apply to all individual residential wells in subdivisions where there are fifteen (15) or more (regardless of lot size) and non-residential or community wells rated at less than 50 gpm yield.

A. Hydro-geological Study

A hydro-geologic report for subdivisions will examine the local hydrogeologic conditions and the relationship between the proposed land use and those conditions. The analysis and report will focus on the groundwater quantity and quality as they relate to the requirements of the proposed subdivision and the potential impacts the subdivision may have on the water resources. A hydrogeologic report shall be required prior to a preliminary subdivision submission regardless of whether it is planned for individual or community wells.

At a minimum, evaluation shall encompass the area within approximately one thousand foot (1,000') radius from each and all proposed well(s). Such evaluation shall include the following:

1. USGS and Berkeley County geologic and topographic information including USGS fracture trace data.
2. Property plats and aerial photographs.
3. Existing Berkeley County Health Department well data or descriptive statistical summary of the same. (e.g. minimum, maximum and mean of well data, etc.)
4. Geologic maps and data reports (well logs, water quality analysis, geologic information).
5. Proposed pumping test plan (Note - this shall only apply if the subdivision's water will be provided by single or multiple community wells).

Using the background information compiled previously, conduct an evaluation of the site hydrogeology and the occurrence, quality, and quantity of groundwater. The quantity must meet the conditions of part A of this Section and quality must conform to requirements of West Virginia Department of Health. These data and conclusions shall be compiled into a hydro-geological report.

B. Pumping Test Requirements (Applies to community wells **ONLY**; Individual wells shall be exempt from this requirement)

Wells shall be installed and tested to provide evidence that the hydrogeologic system is capable of furnishing and sustaining the potable water needs of the eventual inhabitants of the proposed development as follows:

(Applies to both residential and non-residential wells)

1. Prior to the test, the well must be fully developed. Preliminary yield estimates should be determined using standard air-lift methods.
2. Physical or chemical alteration of geologic materials or structures (e.g., hydraulic fracturing, use of explosives, or addition of chemicals) to increase yield of test wells will not be permitted prior to the pumping test.
3. The aquifer test may be conducted whenever water from precipitation is not flowing over the ground surface. A three (3) week delay in testing should be enforced whenever two inches (2") of rain have been recorded within a ten (10) day period in the location of the well to be tested. No production from the well will be allowed for twenty-four (24) hours prior to the pumping test.
4. Water pumped from the well shall be discharged at least fifty feet (50') from the well so that it does not enter the ground and "short-circuit" the aquifer. If this cannot be accomplished safely, or the water will be directed onto an adjoining property, then a temporary water storage method (tank) must be provided.
5. The test shall be conducted using a submersible pump, and the discharge will be monitored using a calibrated flowmeter.
6. The pumping rate shall be controlled so as to maintain a constant discharge rate and allow pumping water levels to stabilize at some point in the test.
7. The test shall be at least twenty-four (24) hours in duration at a constant pumping rate.
8. In the event an accurate totalizing flowmeter cannot be used (e.g. if the flow from the well is less than 3 – 4 gpm) the tester can determine the flow rate by obtaining the time to fill a container of known volume. The number of seconds to fill the container, and the exact time of day each such measurement is taken shall be recorded every hour.
9. Water levels shall be measured every fifteen (15) minutes during the first hour of pumping, and hourly for the next seven (7) hours. All water levels measurements must be recorded with the exact time of day the measurement was taken.
10. Upon the cessation of pumping, the water level shall be measured after every fifteen (15) minutes for the first hour, and then every two (2) hours until ninety percent (90%) of the pre-test static water level is achieved (full recovery). If the well does not fully recover after twenty-four (24) hours it will be considered a non-sustainable source of water.

11. The allowable (or permitted) yield of the well shall be total gallons pumped divided by the duration of the test in minutes, provided that full recovery occurs within the following twenty-four (24) hour recovery period.

C. Individual Wells

1. Approval of subdivisions with fifteen (15) or more lots will not require wells to be drilled in advance; however a use and occupancy (U & O) permit will not be issued until the well has been approved by the County Health Department and has been shown to meet the requirements of this section of the ordinance.
2. If an individual well does not meet the minimum > three (3) gpm yield requirement as specified in the part A of this Section, then the water supply system (i.e. borehole + storage/pressure tank) must provide a reservoir of three hundred and sixty (360) gallons (equivalent to the regional MDD). In addition, the well must be capable of supplying enough water to refill the reservoir within a twenty-four (24) hour period.

D. Sustainable Yield Evaluation (Individual wells shall be exempt from this requirement). Data analysis shall include an analysis of sustainable yield of the aquifer and well based upon the following:

- Extrapolation of drawdown to one hundred and eighty (180) days.
- Significant adverse impacts (quality or quantity) on neighboring wells and springs.

E. Reporting Requirements

The principal reporting requirement shall be:

1. The hydrogeologic report, and
2. The pumping test report, which must be made available prior to preliminary plat approval. (Individual wells are exempt from this requirement).

Section 402.4.4 WELL PROVING REQUIREMENTS: COMMUNITY WELLS AND HIGH PRODUCTION NON-RESIDENTIAL WELLS (>50 gpm)

This section shall apply to community wells and non-residential wells rated at yields of greater than fifty (50) gpm. This yield shall be either based on single wells, or the cumulative yield of a production well field, where the wells are all within the same aquifer or hydrologic unit.

NOTE: Before starting construction, a location map of the proposed new wells and any related construction shall be submitted to the WVDEP in the appropriate Regional office for a determination as to whether that construction requires any other

permits, such as for disturbance of protected streams or springs, protected freshwater wetlands, or for storm water runoff from a construction site. Other factors to consider when siting a project include flood plain location, agricultural districts, conceptual wellhead protection/recharge areas, existing or potential groundwater contamination sources, and existing sub-surface utility corridors (whose bedding might provide a preferential path for groundwater flow or contamination).

A. Hydro-geological Study

A hydro-geologic report/water supply assessment for subdivisions will examine the local hydrogeologic conditions and the relationship between the proposed land use and those conditions. The testing will focus on the groundwater quantity and quality as they relate to the requirements of the proposed subdivision and the potential impacts the subdivision may have on the water resources. A hydrogeologic report shall be required prior to a preliminary subdivision submission.

At a minimum, evaluation shall encompass the area within an approximate ¼-mile radius from each proposed well. Such evaluation shall include the following:

1. USGS and Berkeley County geologic and topographic information, including fracture trace analysis data available from the USGS.
2. Property plats and aerial photographs.
3. Existing Berkeley County Health Department well data or descriptive statistical summary of the same. (e.g. minimum, maximum and mean of well data, etc.)
4. Geologic maps and data reports (well logs, water quality analysis, geologic information including karst features, bedrock outcrops, etc.).
5. At sites with bedrock outcrops, fracture orientations (strike and dip measurements) shall be measured and documented in the report. The number and orientations of linear features or photo lineaments shall be analyzed and correlated with documented bedrock fractures.
6. A proposed pumping test plan.

Using the background information compiled previously, conduct an evaluation of the site hydrogeology and the occurrence, quality, and quantity of groundwater. These data and conclusions shall be compiled into a hydro-geological report.

B. Pumping Test Requirements

Wells shall be installed and tested to provide evidence that the hydrogeologic system is capable of furnishing and sustaining the potable water needs of the eventual inhabitants of the proposed development. Well construction and testing shall be performed in accordance with the West Virginia Department of Health and the Berkeley County Health Department.

Prior to the commencement of any drilling or pumping tests, a pump test plan will be required to obtain preliminary approval for well development. The pump test plan should contain location, construction, and purpose of at least two (2) or more monitoring wells. It shall also include the planned pumping rate, duration, and frequency of monitoring. A minimum test shall include:

1. Test Pumping Rate - The pump test must be performed at or above the pumping rate for which approval will be sought in the water supply application. If multiple wells are to be pumped simultaneously to achieve the necessary yield, the test shall incorporate such a pumping plan. To reproduce the anticipated stress on the aquifer, the pump test shall be done when any nearby wells normally in operation are running. Pumping of other wells in the test area shall be monitored.

A constant pumping rate should be maintained throughout the test. The pumping rate should be measured accurately and recorded at least as often as water level measurements (see No. 5 of this section, Measuring Schedule).

During the first hour of the test, any failure to pump within ten percent (10%) of the test pump rate for any reason will require termination of the test, recovery of water levels to static, and a restart of the test. Later pump failures must have no significant effect on the data or a similar termination and restart is necessary

2. Length of Test **-** Regardless of the type of aquifer, pump tests shall be conducted for a minimum of seventy-two (72) hours at a constant pumping rate.

(a) A minimum of six (6) hours of stabilized drawdown must be displayed at the end of the test. Stabilized drawdown is defined herein as a water level that has not fluctuated by more than plus or minus 0.5 foot for each one hundred feet (100') of water in the well (i.e., static water level to bottom of well) over at least a six (6) hour period of constant pumping flow rate. The plotted measurements shall not show a trend of decreasing water level.

(b) If stabilized drawdown is not achievable, the test period may be extended or semi-log extrapolation of drawdown versus time (or other similar methods) may be employed to demonstrate the ability of the aquifer to supply a pumping rate equal to the desired yield (which must be equal to or less than the pump test yield) on a long term basis. Normally, an extrapolation of six (6) months of pumping with no assumed recharge must be compared against the level of water remaining above the pump intake at the end of the period (see paragraph No. 12 of this section, Analysis of Pump Test Data). This type of evaluation may be used in lieu of satisfying the objectives of section 2(a) of this document at the discretion of the County Engineer.

(c) Excessive rainfall may require extension of the test or a rescheduling of the test.

3. Pre-Test Conditions - No pumping should be conducted at or near the test site for at least 24 hours prior to the test (including the step-drawdown test). Static water levels at the pumping well and observation wells should be measured at least daily for one (1) week prior to the start of the test and again immediately prior to the start of the test. If on site or nearby pumping cannot be curtailed due to system supply needs or other factors, the County Engineer should be consulted prior to the start of the test.

4. Discharge of Water - Water discharged during the pump test should be conducted away from the pumping well to a nearby stream or surface water body if possible, or as far from the well as is practicable.

5. Measuring Schedule - Water levels in observation wells and at the pumping well should be measured to give at least ten (10) observations of drawdown within each log cycle of time, beginning one (1) minute after the start of pumping. A suggested schedule of measurements at all wells is as follows.

Table 4-2

Time intervals for water level measurements	
Time After Pumping Started	Time Intervals
O to 15 minutes	1 minute
15 to 50 minutes	5 minutes
50 to 100 minutes	10 minutes
100 to 500 minutes	30 minutes
500 to 1000 minutes	1 hour
1000 to 5000 minutes	4 hours

6. Observation Wells - At least two (2) observation wells or piezometers should be monitored during the pump test. The observation wells should be placed so as to best define the hydrogeologic characteristics of the aquifer with respect to the pumping well. In some cases the Engineering Department may recommend that a representative sample of nearby homeowner wells be monitored during the pump test, regardless of whether the anticipated zone of influence will extend to those wells or not. Existing wells may be used as observation wells.

Water levels in nearby water bodies (streams and springs) should be measured prior to and during the test.

7. Recovery Period - Water level measurements should be collected during the recovery period for all wells using the same procedure and time pattern followed at

the beginning of the pump test (see No. 6.) Measurement should commence at least one (1) minute prior to shutdown of the pumping well and continue for at least twelve (12) hours. Water level measurements should be made to the nearest 0.01 foot. To obtain accurate data during the recovery period, a check valve must be installed at the base of the pump column pipe in the pumping well to eliminate backflow of water into the well. Water level measurements should also be collected during the recovery period in all off-site monitoring wells, such as homeowner's private wells.

8. Rainfall Measurement - Rainfall should be measured to the nearest 0.01 inch and recorded daily at or near the site for one (1) week preceding the pump test, during the test, and during the recovery period. A log of weather conditions during this period should also be kept, including barometric pressure recorded on the same schedule as rainfall. Weather station data available from within a reasonable distance of the test site can be utilized.

9. Surface Water Measurements - Fluctuations in surface water stages (or flow) for all surface waters within one thousand feet (1000') of the pumping well should be measured to the nearest 0.01 foot. Measurements should be made using, as appropriate: weirs, staff gages (with stilling wells as necessary), nested piezometers, etc. The horizontal distance between each observation point and the pumping well should be measured to the nearest 0.1 foot. The vertical elevation of a fixed reference point on each observation point should be established to the nearest 0.01 foot and reported in North American Datum 1983 (NAD 1983). Measurements should be read and recorded at least once daily for one (1) week prior to the start of the test and at least twice per log cycle, after the first ten (10) minutes, for the duration of the test. Measurements should be made more frequently if surface water levels are changing rapidly. The degree and nature of hydraulic connection with the surface water body should be quantified.

10. Water Quality Samples - Comprehensive (per WV DHHR requirements) water samples should be obtained from the pumping well during the last hour of pumping. Samples should be analyzed to establish acceptable quality as per WV DHHR requirements.

11. Wells Under the Influence of Surface Water - Additionally, If the pumping well is, or may be, hydraulically connected to a surface water body, water samples from the well should be analyzed in the field at least once every four (4) hours for the following parameters: pH, temperature, conductivity, and hardness. Further, representative water samples from the surface water body should be taken at both the beginning and the end of the pump test and analyzed for the same parameters. The WV DHHR should be consulted on all issues related to groundwater under the influence of surface water.

12. Analysis of Pump Test Data - In order to accurately analyze pump test data, it is necessary to use the methods and formulae appropriate for the hydrogeologic and

test conditions encountered at, and specific to, the pump test site. Knowledge of the hydrogeologic conditions of the area is necessary in order to ensure the use of appropriate techniques of analysis. Accordingly, analysis of pump test data should be carried out by a hydrogeologist, professional engineer or geologist with hydrogeologic training, or another appropriately trained evaluator.

(a) Data Corrections - Water level data, graphs, and interpretations should be corrected, as appropriate or deemed significant, for the effects of: ambient water level trends; partially penetrating production well(s); partially penetrating observation wells; delayed yield from unconsolidated aquifers; aquifer thickness, recharge and/or impermeable boundaries; barometric pressure changes; changes in stage in nearby surface water bodies (including springs); recharge events (rainfall, snow melt) during the week preceding the test, during the test, or during the recovery period; influence from nearby pumping wells; and any other hydrogeologic influences. All such data and calculations should be included in the test information package.

(b) Theoretical time-drawdown graphs should be prepared from the recorded drawdown graphs. The graphs should be derived from the pump test data, setting time equal to one hundred eighty (180) days and groundwater withdrawal equal to the pump test production rate. Based on these graphs and the remaining standing water in the well at the end of the pump test, a maximum safe pumping rate (yield) should be established for each production well or for the well field if simultaneous pumping of multiple production wells is planned (taking into account well interference).

(c) Theoretical distance-drawdown graphs should be prepared. The graphs should be derived from the pump test data, setting time equal to one hundred eighty (180) days and groundwater withdrawal equal to the pump test production rate. It is highly recommended that the following wellhead protection areas be delineated using all available information (e.g., published hydrogeologic information, local knowledge, pump test results, etc.) and best professional judgment: zone-of contribution area or recharge areas (for confined or bedrock aquifers), and aquifer boundary area.

(d) Recovery data should be analyzed in a similar manner to drawdown data.

13. Submission of Data - Data submitted in support of a requested groundwater withdrawal should include:

- the raw pump test data (legible) with: date, clock time, elapsed time (minutes), measuring point (top of casing) elevation, static water level, water level measurements, and calculated drawdown [an "Excel" or "Quattro Pro" spreadsheet file may be submitted with this data in place of a written record];

- engineering diagrams showing construction details (e.g. well casing, screen setting and casing stickup, etc.) and depths of pumping wells and observation wells;
- geologic logs (completed well registration reports);
- transmissivity, storage coefficient, and safe yield, as well as all graphs, formulae and calculations used to estimate these values;
- scaled site plan showing water level elevation controls (e.g., top of casing) and grade elevation for all wells, staff gages and other water measuring points, pump test discharge piping and discharge point, the location of nearby surface water bodies, and, if applicable, the one hundred (100) year flood plain and elevation;
- latitude and longitude (in degrees, minutes, seconds, tenths of second), State Plane Coordinates, or Universal Transverse Mercators (UTMs) for all production wells and any observation wells which are to remain, preferably in NAD83 (specify the method and datum used to locate the wells);
- a topographic map showing wellhead protection areas and the locations of existing or potential groundwater contamination threats; and
- Interpretations including methodology, geologic sections of the area, references, and rationale.

All documentation submitted must be legible. Plans and maps should use shading, cross-hatch patterns, symbology, etc., such that features are readily distinguishable and remain readable when photocopied in black and white.

14. Discharge of Water - Please note it is not legal in the State of West Virginia to discharge water into any water body or wetland if such discharge results in turbidity or erosion leading to turbidity or down stream flooding. Accordingly, if it is anticipated that discharged water will create flooding, erosion and/or turbidity, water must be directed to a holding area and released in a controlled manner to prevent such problems.

C. Sustainable Yield Evaluation

Data analysis shall include an analysis of sustainable yield of the aquifer and well based upon the following:

- Recharge to the site under normal and drought conditions.
- Extrapolation of drawdown to one hundred eighty (180) days without significant recharge.
- Significant adverse impacts (quality or quantity) on neighboring wells and springs.

D. Delineation of Contributing Areas

The delineation of recharge zones and contributing areas to a community water supply well requires the application of appropriate geologic information and methods

to assess ground water flow and the influence of boundary conditions. Unless the aquifer is homogeneous and isotropic and no near-field boundary conditions are present, analytical methods (e.g., Wellhead Protection Areas (WHPA), stagnation point calculations) will not provide realistic results. For most semi-confined, fractured bedrock wells, surface water bodies provide positive (recharge) boundaries, and the edges of the water-bearing unit provide negative (barrier) boundaries. These conditions influence the contributing area significantly, and cannot be adequately simulated by common analytical methods.

A Certified Geologist or Hydro-geologist who is familiar with the conditions at the well site shall perform the delineation. The goal of wellhead delineation is to provide the public water supplier with an area that is most likely to provide recharge to the well. This area must be reasonably sized, and appropriate to the anticipated yield of the well.

E. Reporting Requirements

The principal reporting requirement shall be:

1. The hydrogeologic report, and
2. The pumping test report, which must be made available prior to preliminary plat approval.

Section 402.5 Sensitive Areas

Section 402.5.1 Application

The following applications or permits as required by this Ordinance shall also comply with the additional identification and design requirements below.

1. Applications for approval of Major Subdivisions or Sketch Plans.

Section 402.5.2 Identification of Sensitive Areas

All applications subject to this section shall include the following information on a scale drawing. The relationship between the following features and the proposed use or construction shall be clearly shown in addition to a Phase 1 Environmental Study:

1. Location of streams, sinkholes and springs.
2. The boundaries of any flood plain as defined in the Berkeley County Floodplain Management Ordinance. (Appendix F).
3. Areas of severe slope, defined as greater than 1 ½' horizontal to 1' vertical (66.6%).
4. Location of current or proposed pedestrian trails, on or adjacent to the subject site.

5. Location of Registered State or National historic sites.
6. Significant Karst features.
7. Areas that have been polluted, contaminated, or areas that pose a human health/safety risk.

Section 402.5.3 Design Requirements

If any of the features listed above exist on the subject property, the following additional requirements shall apply:

1. Stream buffers shall be provided in the manner as described below.
2. Use of the floodplain shall be governed according to the Berkeley County Floodplain Ordinance.
3. Identification of severe slopes shall be in the manner as described below.
4. Identification of wetlands shall be in the manner as described below.
5. Where it has been documented by the U.S. Fish and Wildlife Service that threatened or endangered species exists on the site, the applicant shall provide evidence of that determination and demonstrate that the permitted activity will not disturb the habitat area. The applicant must also demonstrate compliance with any other applicable restrictions imposed by the U.S. Fish and Wildlife Service.
6. If known or suspected contaminated areas are identified, the applicant must document that the contamination will have no effect, currently or in the future, on the use requested.
7. The location of all sinkholes shall be shown on the existing conditions scale drawing, included with the preliminary plan submission. The edge of the sinkhole is to be considered the last closed contour based on two foot (2') contour mapping.
8. All sinkholes identified prior to construction shall be either remediated or separated from construction by a minimum fifty-feet (50').
9. Remediation shall be carried out under the direction of a qualified Professional Geologist or Geotechnical Engineer. Mitigation shall **be** carried out according to the WVDEP Sinkhole Management Guidance Document (August 2005 et. seq.), or other applicable standards as recommended by the PG or PE and approved by the County Engineer.
10. Any improvements planned to fall within one hundred feet (100') of any sinkhole (remediated or not), shall require a thorough subsurface investigation conducted by a qualified PG or PE to ensure that the planned improvements do not present a threat to human health, safety, or the environment. Should these investigations detect previously unknown sinkhole features, paragraph 8 applies.
11. For any subsurface investigations requiring boreholes, such as air track drilling or rock coring, the boreholes must be grouted upon completion. All air track drilling operations used to determine the depth

of overburden and continuity of bedrock shall be monitored full-time by a PG or PE or other qualified individual as defined by the Ordinance.

12. Underground utilities located within one-hundred feet (100') of a karst feature, then a dike of clay or other suitable material shall be placed across the trench at twenty-foot (20') intervals or less along the entire length which passes through the one hundred foot (100') radius, or as directed by a PG or PE.

Section 402.5.5 Stream Buffers

Where an application contains any portion of a perennial or intermittent stream, a buffer shall be established and shown on the plan. The width of the buffer shall be a minimum of thirty-five feet (35'), measured from and perpendicular to the top of the stream bank. The buffer shall be expanded to include any floodplain determined by the Floodplain Ordinance, any field verified non-tidal wetland areas and/or any area of severe slope as defined in this Ordinance.

Within the stream buffer vegetative ground cover shall be maintained at all times. The U.S. National Resources Conservation Service (NRCS) may recommend planting species and methods when no ground cover exists in the buffer or additional planting to improve existing ground cover. No permanently affixed building shall be permitted within the stream buffer except those designed to improve water quality in the stream or structures such as fences designed to limit access to the stream. No septic system shall be constructed within the buffer nor shall any septic reserve area be established within the buffer.

Section 402.5.6 Severe Slope

These provisions shall apply to all land development as defined in the Berkeley County Subdivision Ordinance.

Identification of severe slopes shall be established by the applicant at the time of application.

Severe slopes shall consist of all land which has a natural slope of 1 ½' horizontal to 1' vertical (66.6%) or greater. The natural slope of an area shall be determined by calculating the distance between field verified contours. The horizontal run shall be measured at right angles to the natural contours.

Section 402.5.6.1 Verification of severe slope delineation

Where the applicant has provided a determination of the severe slope the County Engineer shall verify the accuracy of the boundary. The Planning Commission, upon recommendation by the County Engineer, may render adjustments to the boundary delineation in order to comply with this Ordinance.

Section 402.5.7 Wetlands

At the time of applications, wetlands shall be verified through a Jurisdictional Determination by an Army Corps of Engineers representative, and all wetlands boundaries surveyed. If there are no wetlands present onsite, a letter stating such shall be submitted from a qualified third party.

Wetland boundaries shall be established as a buffer area of fifteen feet (15') along any delineated wetland and shall be based on a wetland investigation and a Jurisdictional Determination conducted by an Army Corps of Engineers representative.

Comprehensive Plan maps related to flood plains and other general soils and hydric soils information may be used as a reference for determining the general location of major wetland areas. Final wetland delineations shall be through a jurisdictional determination by the U. S. Army Corps of Engineers.

Wetland disturbance shall be permitted. However, the US Army Corps of Engineers must approve any such disturbance.

Section 402.5.7.1 Standards

1. In all applications, wetlands shall be shown on a drawing indicating their location and measurement in accordance with the above standards.

2. A conservation easement covering the wetlands shall be provided on the plan, or approved mitigation plans shall be submitted.

Section 403. Final Plat

Section 403.1. General

The Final Plat shall be legibly drawn on a material required by the Clerk of the County Commission and clearly labeled "Final Plat". The scale shall be one hundred feet (100') or less to the inch and the size of the sheet shall be twenty-four inches (24") by thirty-six inches (36"), including a one and one-half inch (1 ½") left margin for binding. When more than one sheet is required, an index sheet of the same size shall be submitted showing the entire land development drawn to scale. In addition, one (1) electronic media formatted copy shall be required. Please reference the Berkeley County Digital Data Submission Standards Policy.

Section 403.2. Required Information

a. The Final Plat shall show:

1. The location of the proposed development by inserting on the

plat, a location vicinity map at a scale of no less than six hundred feet (600') and no greater than one thousand feet (1000') to the inch indicating the location of the property with respect to surrounding property and streets. The map shall show all streets and property within one thousand feet (1,000') of the applicant's property.

2. A title block as part of the standardized cover sheet as prescribed by the Berkeley County Planning Commission Staff.

3. Names and location of adjoining subdivisions, if any, and location and ownership of adjoining unsubdivided property along with deed book and page number, tax map and parcel number.

4. A north arrow referencing true and magnetic north. Final plats with north referenced to the State Plane North Coordinate System must include, in addition to references to true and magnetic north, coordinate values located at the end points of the longest perimeter boundary line.

5. The name, address, and telephone number of the owner or applicant.

6. The name, address and seal of the West Virginia registered professional civil engineer or registered professional surveyor responsible for the preparation of the plat, and certification that the plat represents a survey made by him and that all monuments shown thereon actually exist, and that their location, size and material are correctly shown.

7. All plat boundary and proposed lot lines labeled with length of courses to hundredths of a foot and bearings to the nearest second. Boundary lines shall be determined by an accurate field survey. The data for all curves shall be shown in detail at the curve or in a curve data table containing the following: radius, delta, arc, tangent, chord and chord bearing.

8. Provide site data for subdivision including tax map, parcel number, deed book/page reference. Include number of lots, gross density and acreage of storm water management areas and access to them and open space.

9. Bearings and distances of established street boundaries and easements.

10. The accurate location and type of material of all existing and

proposed permanent reference monuments. The plan shall be tied to the State of West Virginia State Plane North Coordinate System.

11. When the Final Plat under review is a re-plat of a subdivision of record, there shall be shown the following statement on the Final Plat with the applicable entries made thereon:

    This is a replat of _____
    (name of subdivision)

    recorded on _____, in Plat Book #_____,
    (date of recordation)

    Page # _____, owned by _____ at
    (name)

    time of recordation.

    _____
    Signature of Present Owner

12. In the case of a re-plat of a subdivision of record, dotted or dashed lines shall be used to show the features or locations to be abandoned and solid lines to show the currently proposed features or locations.

13. The exact layout for the Land Development, including:

    i. Street and alley lines; their names, bearings, lengths and widths, including widths along the line of any obliquely intersecting street.

    ii. All restrictive easements or rights-of-way, when provided for or owned by public utilities, with the limits of all easement areas shown and stated on the plat.

    iii. Coverage, density and parking calculations.

    iv. A note referencing the current deed(s) in the chain of title including grantor(s) and grantee(s), date and recording reference(s).

14. Show floodplains as depicted on current Federal Emergency Management Agency (FEMA) FIRM or as indicated by a flood plain study and, where applicable and available, bearings and distances of flood plain easements.

15. If individual water supply systems are to be provided, the location of the well as being one hundred feet (100') distant from any septic system and ten feet (10') distant from any property line is required.

    If individual sewage disposal systems are to be provided, location of required septic reserve areas and the location and extent of area or areas suitable for septic tank filter fields as approved by the West Virginia Department of Health shall be shown.

16. Lots shall be numbered in numerical order throughout the entire subdivision.

17. Area of each lot to the nearest square foot.

18. All building setback lines and any other setback lines or street lines established by public authority and those stipulated in the deed restrictions.

19. Accurate outlines and acreages of any areas to be reserved or dedicated for common use by the residents of the Land Development, or for the general public use with the purposes indicated thereon.

20. The following statement shall be included, as applicable: "The Soil Survey of Berkeley County, West Virginia indicates a seasonal high water table on lots _____ to be less than five feet (5') below the surface and therefore basement construction is not recommended for those lots."

21. Provide and sign Owner's Certification block, (example provided by the Berkeley County Planning Department).

22. The remediated and un-remediated sinkholes and setbacks shall be shown.

23. A certificate for roadway widening reservation as follows: " I hereby certify that areas shown hereon reserved for future roadway widening shall be conveyed to WV Department of Highways at the time of roadway widening without any compensation. This agreement shall be binding upon all my assignees or heirs.

_____ _____

Developer Date

24. Each plat shall include pertinent information from the Berkeley County Soils Survey, including the "Soil Properties and Qualities" and (Implications for) "Community Development" sections of the Survey for the soils types present on the subject development Parcel. **(Added January10, 2013)**

25. Each plat shall include the following note: "This Final Plat substantially conforms to the Preliminary Plans previously advanced by the Berkeley County Planning Commission on **[date]** and no changes have been made to those plans. All design, improvement, and construction methods and details should reference those Preliminary Plans. **(Added January 10, 2013)**

b. The Final Plat shall be accompanied by:

Copies of the Declaration of protective covenants and restrictions, pursuant to the provisions of Chapter 32B, West Virginia Code, as approved by the Planning Commission legal counsel, in a form appropriate for recordation, including covenants governing the maintenance of public spaces, common area or reservations, and copies of approved provisions for maintenance and operation of facilities, if applicable, including the storm water management maintenance agreement.

c. Electronic Media Required Format:

Please reference the Berkeley County Digital Data Submission Policy Document.

Section 404 Minor Plats

Section 404.1 General

The Minor Plat shall be clearly drawn on an acceptable sheet size (8 ½" x 14", 11" x 17", or 24" x 36") and shall be clearly labeled as to the type of Minor Plat (Plat of Merger, Boundary Line Adjustment, Family Transfer, Plat of Easement, Testamentary Transfer). **(Added January 10, 2013)**

Section 404.2. Required Information

A. All Minor Plats shall show:

1. Plat title.

2. Owner name, tax district, map and parcel number, deed book and page reference of subject property.

3. Name, address, license number, seal and signature of the surveyor.

4. The location of the proposed project by inserting on the plan a vicinity map showing a minimum of one thousand feet (1000') adjacent to the subject property.

5. The map scale, plat date and north arrow with source and date.

6. All plat boundary and proposed lot lines labeled with length of courses to hundredths of a foot and bearings to the nearest second. The data for all curves shall be shown in detail at the curve or in a curve table containing the following: radius, arc length, chord and chord bearing.

7. A description of all property corners, referencing the monument type and whether or not the monument was found or set.

8. The lot number and areas of the lots to the nearest square foot (or acres to at least four decimal places) for each lot/parcel.

9. The locations of proposed well and septic reserve areas. Well areas shall be at least one hundred (100) feet from septic reserve areas and ten (10) feet from property lines.

10. All street boundaries and existing right-of-ways with widths.

11. All proposed right-of-ways shall be at least fifty (50) feet in width from a recorded, existing right-of-way (except for Family Transfers: see Section 302.2). Panhandle lots may be a minimum of twenty-five (25) feet in width and a maximum of four hundred (400) feet in length.

12. All adjacent properties including current owners, tax map and parcel number, and deed book and page reference.

13. A statement on the plat as to whether or not the lot/parcel lies within the 100-year floodplain including the FIRM Map Panel number, date and base flood elevation, if known. Floodplain boundaries shown by graphical methods shall be properly cited.

14. Minor Plats creating new building lots shall provide the following outside agency approvals, as applicable:

a. WV Department of Highways Entrance Permit
b. Berkeley County Health Department (wells and septic)

c. Berkeley County Public Service District (public sewer and public water)

15. Plats creating common access easements must include the following statement: “Lot owners benefiting from the access afforded by the private right-of-way created with this plat are responsible for the maintenance of said private right-of-way.”

B. Family Transfer / Testamentary Plat Items:

1. Family Transfer Plats shall include the following note: “The intent of the owner is to transfer the land only to a member of the immediate family. A lot which is created via a Family Transfer Exception may not be re-conveyed to a non-family member for a period of five (5) years from the date of recording of the plat of record without a variance from the Planning Commission. Any further subdivision activity will comply with all applicable Berkeley County Regulations.”

2. Family Transfer Plats shall also include a draft deed with the above statement included in the deed.

3. Plat shall show all setbacks as prescribed in Section 503.

4. Family Transfer and Testamentary Transfer plats shall include the following note: “Any earth disturbance of over 5,000 square feet shall require stormwater management.”

5. The following statement shall be included, as applicable: “The Soil Survey of Berkeley County, West Virginia indicates that soils on this site may have a seasonal high water table. Therefore, prior to any construction, it is recommended that the builder and/or contractor verify if basement construction is allowed or recommended on the site.”

6. All soils on the site shall be labeled and a soil boundary shall be provided. **(Added January 10, 2013)**

ARTICLE 5 – DESIGN STANDARDS

Section 501. General

Section 501.1. Application

a. The principles, standards, and requirements contained in this article, or incorporated in this article by reference, will be applied by the Planning Commission in evaluating plats and plans for proposed Land Developments.

b. The standards and requirements outlined herein, or incorporated by reference, shall be minimum standards and requirements.

c. The Applicant may place legal restrictions on the development greater than those required in this article.

Section 501.2 General Standards

a. All portions of a tract being subdivided shall be taken up in lots, streets, public lands, common area or other proposed uses so that land locked areas shall not be created.

b. Easements controlling access to lots, public lands or adjacent private lands are permitted.

c. Land to be subdivided or developed shall be laid out and improved in reasonable conformity to existing topography in order to reduce grading and cut and fill.

d. The land shall be of such character that it can be used safely for building purposes without danger to health or peril from fire, flood, subsidence or other menace.

e. Land Development projects shall not be designed or planned for tracts of land subject to periodic flooding unless the design and plans will meet the requirements of the (Federal) National Flood Insurance Program, 42 U.S.C. 4011 et seq. and the accompanying regulations of 24 C.F.R. 1901.1 et. seq. and the Berkeley County Floodplain Ordinance. Each application for approval under these regulations for land subject to periodic flooding shall include a study which demonstrates to the satisfaction of the Planning Commission and the Engineering Department that the Land Developments will comply with the above federal standards. All required, appropriate Federal forms shall be completed and filed with the Planning Commission.

f. Developers are encouraged to preserve and design around trees, groves, scenic points, historic spots and other community assets and landmarks.

g. On-lot sewage disposal systems shall be setback a minimum of one hundred feet (100') from known sinkholes or sinks. A septic reserve area of ten thousand (10,000) square feet, or enhanced septic system as determined and approved by the County Health Department, State Health Department or WVDEP, as applicable, is required and shall remain permanently available for such use.

h. Structures shall be setback a minimum of one hundred feet (100') from the outer perimeter of an existing or proposed cemetery or historic structure listed on the National Register of Historic Places and fifty feet (50') from any railroad right-of-way. **If cemetery is located on an adjoining property, a minimum thirty-foot (30') buffer shall be required.**

i. Guest Residence

A guest residence may be established subject to the following requirements:

1. The square footage of the guest residence shall not exceed sixty percent (60%) of the habitable square footage of the primary residence.

2. The guest residence shall have approved utilities.

3. The parcel of land containing a guest residence shall remain in single ownership.

Section 502. Streets, Roads and Parking Facilities

APPENDIX A contains the minimum design criteria and standards for construction of streets, roads and parking requirements for development within Berkeley County.

Section 502.1 Minimum Standards for Subdivision Access

Any phased or non-phased residential development which generates, initially or cumulatively, one hundred (100) lots or greater shall be required to have a minimum of two (2) points of access onto a public road or a WV DOH right-of-way. The access point(s) must meet all other applicable requirements of this ordinance, and must be approved by the West Virginia Division of Highways.

Section 502.2 Right-of-Way and Buffer yard Requirements for Development on State Roads

All developments which have frontage on a state road shall dedicate twenty-five feet from the center line of the existing road to the Division of Highways. All required setbacks shall be measured from the edge of the dedication. **(Amended January 10, 2013)**

In major subdivisions, where the lots along State Highway Rights-of-way are less than an average of fifteen thousand (15,000) square feet, the Developer shall also provide a fifteen foot (15') vegetated buffer yard between the back or side lot lines and the State Right-of-Way for any lot abutting a State Road Right-of-Way. This buffer yard shall not be included within the current r-o-w or future r-o-w reservations.

Section 503. Building Setback Lines

A. Where the subdivided area is intended to be used for residential purposes, the building setback lines identified in the table below shall be observed:

Table 5-1

	Highway Classifications		
Minimum Setbacks	Arterial	Collector	Local/Other
Front	20'	20'	10'
Side*	10' minimum	10' minimum	10' minimum
Rear	20'	20'	20'

*Ten foot (10') side yard setback. If any lot adjoins a State Highway right-of-way, then a minimum fifty-foot (50') setback is required. **(Amended January 10, 2013)**

B. Where the subdivided area is intended to be used for non-residential purposes, the building setback lines identified in the table below shall be observed:

Table 5-2

	Highway Classifications		
Minimum Setbacks	Arterial	Collector	Local/Other
Front	75'	50'	5'
Side	15'	15'	5'
Rear	25'	25'	5'

Section 503.1. Blocks

A. The length, width, shape, and design of blocks shall be based on the site analysis and the intended use proposed for the site.

B. Blocks shall not exceed one thousand six hundred feet (1600') in length and shall not be less than five hundred feet (500') in length.

C. Depth of a block shall equal the depth of two (2) approved lots which share the same rear lot line. However, the block depth may vary from the requirement in cases where parallel roads are utilized or where topographic limitations exist.

Section 504. Lots

The following regulations shall govern the design and layout of lots:

A. All lots shall have frontage upon an existing or proposed public street. Lots within a major residential subdivision development that are less than sixty thousand (60,000) square feet shall take access from an interior road system.

B. Access. No residential lot less than 60,000 square feet shall have direct access to an arterial or major collector road. Access shall be permitted from Arterial or Collector roads to parking lots serving a minimum of any combination of eight (8) dwelling units of single family attached dwellings: (Duplex, Triplex, Quadruplex, Town House, etc.) and or multi-family dwellings. **(Amended January 10, 2013)**

C. Where a drainage swale, perennial or annual stream separates the buildable area of a lot from the street upon which it takes access, provision shall be made for the installation of a culvert or other structure. The design of the culvert or other structure is subject to approval by the County Engineer.

D. "Panhandle" lots shall be permitted providing that only one lot is situated between the main body of the panhandle lot and the access roadway. Panhandles shall be a minimum of twenty-five feet (25') in width and a maximum of four hundred feet (400') in length. When two "Panhandle" lots are situated side by side and have one proposed access location the access can be reduced to a single twenty-five foot (25') wide common driveway within a shared access easement.

E. The following tables illustrate the minimum requirements for proposed lots, subject to other conditions as noted in the Berkeley

County Subdivision Ordinance. This provision may not apply to existing lots of record. **(Amended January 10, 2013)**

Table 5-3

A. CONDITION - With Public Water AND Public Sewer			
Type of Development	Maximum Impervious Coverage	Minimum [1] Lot Width	Minimum Lot Size
Single Family Residence	60 %	75 Feet	7,500 Square Feet
Duplex Residence	60%	85 Feet Total lot width	9,000 Square Feet
Multi-Family Residence	60%	100 Feet	10,000 Square Feet, plus 400 sq. ft. for each one bedroom unit; and 600 sq. ft. for each unit with two bedrooms or more.
Townhouse	60%	18 Feet [2]	1,800 Square Feet with a maximum of 10 units per acre.[1]
Commercial	80%	100 Feet	No minimum
Industrial	80%	150 Feet	40,000 Square Feet

[1] In a Townhouse Development 30% of the units may be reduced to a minimum lot width of sixteen feet (16') and a minimum lot size of 1,600 square feet. In this case, no one townhouse unit shall contain more than eight (8) dwelling units.

Table 5-4

B. CONDITION - With Public Water AND Individual, On-Lot Sewage Disposal System			
Type of Development	Maximum Impervious Coverage	Minimum [1] Lot Width	Minimum Lot Size
Single Family Residence	40 %	100 Feet	40,000 Square Feet
Duplex Residence	PROHIBITED		
Multi-Family Residence	PROHIBITED		
Townhouse	PROHIBITED		
Commercial	75%	150 Feet	1 Acre
Industrial	75%	150 Feet	1 Acre
Factory Built Home Community	PROHIBITED		

[1]Lots being served by a Community Well may have lots with a minimum lot size of forty thousand (40,000) sq. ft. The minimum lot size is permitted, provided that the resulting density does not exceed the yield calculated by using a minimum lot size of eighty thousand (80,000) sq. ft.

Table 5-5

C. CONDITION - With Approved Individual On-Lot Water Supply AND Public Sewer			
Type of Development	Maximum Impervious Coverage	Minimum [1] Lot Width	Minimum Lot Size
Single Family Residence	40%	100 Feet	40,000 sq. ft.
Duplex Residence	PROHIBITED		
Multi-Family Residence	PROHIBITED		
Townhouse	PROHIBITED		
Commercial	75%	150 Feet	1 Acre
Industrial	75%	150 Feet	1 Acre
Factory Built Home Community	PROHIBITED		

Table 5-6

D. CONDITION - With Approved Individual On-Lot Water Supply and Individual On-Lot Sewage Disposal System			
Type of Development	Maximum Impervious Coverage	Minimum [1] Lot Width	Minimum Lot Size
Single Family Residence	35%	125 Feet	60,000 sq. ft.
Duplex Residence	PROHIBITED		
Multi-Family Residence	PROHIBITED		
Townhouse	PROHIBITED		
Commercial	75%	200 Feet	2 Acre
Industrial	75%	300 Feet	2 Acres
Factory Built Home Community	PROHIBITED		

(Amended January 10, 2013)

Table 5-7

E. CONDITION - With Community Well[1] and Public Sewer			
Type of Development	Maximum Impervious Coverage	Minimum Lot Width[2]	Minimum Lot Size[3]
Single Family Residence	35%	75 Feet	7,500 sq. ft.

1. The community well-head must be within the boundary of the proposed development or within one thousand feet (1000') of the same.

2. This minimum lot size is permitted provided that resulting density does not exceed the yield calculated by using a minimum lot size of fifty thousand (50,000) sq. ft.

Section 505. Restrictive Easements

The following regulations shall govern the design and layout of easements:

a. Should utility easements be required along rear or side lot lines, to the fullest extent possible, the easements shall be centered on the lot line(s).

b. No structure shall be permitted to be placed, set or put within the area of an easement, unless the structure adequately proves to facilitate that easement.

c. The Planning Commission, upon recommendation from the County Engineer, may require, when it deems it necessary for safety purposes and to facilitate pedestrian access to community facilities or to another nearby street, perpetual unobstructed pedestrian easements and paved or unpaved sidewalks and/or walkways.

d. Where topography or other conditions make impractical the inclusion of utilities or drainage facilities within street rights-of-way, perpetual unobstructed utility easements at least twenty feet (20') in width shall be provided across property outside the street lines but with satisfactory access to the street. In no case shall easements for individual septic or water systems or any easement or area designated as a septic reserve area be permitted to encroach on any building lot other than the lot which is served by the individual septic or water well system or which the septic reserve area is intended to serve. Septic system easements may be permitted in community open space areas.

e. Where a Land Development is traversed by a watercourse, there shall be provided a drainage easement or right-of-way of not less than ten feet(10') conforming substantially to the line of such watercourse or of such width as will be adequate to preserve the riparian zone.

Section 506. Grading & Drainage

a. Blocks and lots shall be graded to secure proper drainage away from buildings and to prevent the pooling or collection of storm water.

b. All drainage provisions shall be designed to carry surface waters to the nearest practical and adequate street, storm drain, natural drainage way or watercourse and should be diverted away from

any on-site sewage system reserve area, on-site sewage system, unremediated sink hole or water well. Drainage swales on residential lots shall not exceed a facial slope of 3 horizontal:1 vertical in order to allow proper maintenance.

c. The land development shall be provided with drainage structures and/or pipes as are necessary to prevent erosion damage and to satisfactorily carry off surface waters.

d. No excavation shall be made with a face steeper than three feet (3') horizontal: one foot (1') vertical, except under one or more of the following conditions:

1. The excavation is located so that a line having a slope of three feet (3') horizontal: one foot (1') vertical, and passing through any portion of the cut face will be entirely inside the property lines of the property on which the excavation was made.

2. The material in which the excavation is made is sufficiently stable to sustain a slope of steeper than three feet (3') horizontal to one foot (1') vertical. A written statement to that effect from a professional civil engineer, registered in the State of West Virginia and experienced in erosion control, is submitted to and approved by the Planning Commission. The statement shall affirm that the site has been inspected and that the deviation from the slope requirements will not result in injury to persons or damage to property.

3. A concrete or stone masonry wall constructed in accordance with approved standards is provided to support the face of the excavation.

e. No fill shall be made which creates any exposed surface steeper in slope greater than one and a half feet (1.5') horizontal to one foot (1') vertical, except under one (1) or more of the following conditions:

1. The fill is located so that settlement, sliding or erosion will not result in property damage; no sediment will enter or be deposited in watercourses or natural drainage channels; and no hazards to adjoining property, streets, alleys or buildings shall be created.

2. A written statement from a professional civil engineer, registered in the State of West Virginia and experienced in

erosion control, certifying that he has inspected the site and that the proposed deviation from the slope specified above will not endanger any property or result in property damage, nor will any sediment enter or be deposited in watercourses or natural drainage channels, is submitted to and approved by the Planning Commission.

3. A concrete, stone, or masonry wall constructed in accordance with approved standards is provided to support the face of the fill.

f. Storm drains and appurtenances shall be required to be constructed by the Developer/owner to take surface water from the bottom of vertical grades, to lead water away from springs and to avoid excessive use of cross gutters at street intersections and elsewhere.

g. Watercourses shall remain open and shall not be piped or incorporated into a storm water system, except as determined by the County Engineer.

h. In the design of storm sewer systems, the future use of undeveloped areas upstream shall be taken into account in calculating pipe size.

Section 507. Erosion & Sediment Control

All applications must comply with the Berkeley County Storm Water Management and Sediment and Erosion Control Ordinance. Moreover, nothing contained in this ordinance shall be construed to relieve an applicant from any obligation to comply with the Berkeley County Storm Water Management and Sediment and Erosion Control Ordinance.

ARTICLE 6 - IMPROVEMENT AND SUBDIVISION GUARANTEES

Section 601. General: Improvement Guarantees

The Berkeley County Planning Commission in its consideration of all Final Land Development Plans shall condition its approval upon the bonding of all required improvements. **(Amended June 21, 2012)**

Section 602. Guarantee for Installation of Improvements

Section 602.1 Improvements Guaranteed

Upon receiving Planning Commission Final Approval and prior to the Chair signing the final plans, the developer shall complete a Developers' Agreement (Appendix B) and post financial security as required by the Agreement with the County Planning Commission. The bond shall provide satisfactory surety in the amount of one hundred fifteen percent (115 %) of the estimated construction cost of the ultimate installation of the public improvements at prevailing rates. The bond shall be subject to forfeiture to the County Council for the sole purpose of installation or completion of required improvements. The Planning Commission shall have authority on its own initiative and after thirty (30) days notice to the principal, to increase the amount of surety at any time, over and above five percent (5%), if in its judgment and sole discretion, such increase is found to be appropriate. The Planning Commission must justify such decision by a demonstrable increase in costs, which must be disclosed to the principal. **(Amended June 21, 2012)**

Should the applicant apply for a grading and excavation permit prior to the signing of the Developer's Agreement, the required bond estimate shall detail the estimated cost of all site improvements, and shall serve as a guide for the preparation of documentation by the County Engineer indicating the amount of the full bond which shall be required for the subject development.

Section 602.1.1 Modification of Bonding Obligation

A developer of a subdivision may request a modification of the applicable bonding obligation for an approved project (development or phase) for which a surety has been posted prior to the start of construction. "Start of Construction" shall mean: the installation of any water, sewer, gas, electric, roads or stormwater management facilities, but does not include stabilized construction entrances. An approved request shall relieve the developer of the requirement for posting the surety until such time as the development/phase starts construction of the infrastructure improvements. At such time, and a new surety shall be posted by the developer in accordance with Section 602.1. In order to effect such modification, the Planning Commission must find that such modification is in the best interest of the County, and the developer must enter into a binding agreement prepared by the County regarding bonding obligations with the

County (see Appendix H). Said agreement shall be for a period of four years, but may be extended one-time by amendment hereto for up to an additional two years. **(Added June 13, 2013)**

Section 602.2 Installation of Improvements and Surety

The following shall apply with respect to the installation of improvements and the furnishing of bond and surety:

a. The amount of any bond or surety may be proportionately reduced by the County Planning Commission upon recommendation from the County Engineer when portions of the required improvements have been completed. However, no bond or surety amount shall be reduced for thirty (30) days after Final Plan approval has been issued by the Planning Commission.

b. When all required bonded improvements have been installed, the applicant shall notify the County Engineer in writing of said installation. The County Engineer, or his qualified and authorized agent, shall inspect the aforesaid improvements. The County Engineer or his agent shall prepare a report in writing indicating approval, partial approval or rejection and giving the reasons in the case of partial approval or rejection. Said report shall also indicate the cost of the improvements for which approval is withheld.

c. On the basis of the report, the County Engineer shall recommend that the Planning Commission approve or reject the improvements, grant partial approval, or withhold approval and shall notify the applicant in writing of the contents of the report and the action of the County Engineer no later than sixty (60) days after receipt of notice from the applicant of the completion of improvements. Where partial approval is granted, the County Engineer may recommend to the Planning Commission a reduction in the bond in an amount equal to the estimated cost, less five percent (5%), of such completed and approved improvements. In no case shall the bond be reduced below the amount deemed sufficient to secure the unapproved portion of the improvements.

d. If any portion of the required improvements is rejected by the County Engineer, the applicant shall cause the same to be satisfactorily completed and shall initiate the same procedure of notification as outlined in (b) above.

e. If the required improvements have not been installed in accordance with the Developers' Agreement, the applicant and surety issuer shall be liable to the County Commission for the cost of required improvements not installed or improperly installed, or for the

amount of surety, whichever is less. Upon receipt of the proceeds thereof, the County shall repair, install or cause to be installed such improvements.

f. In the event the County, due to the Applicant's failure to construct the improvements in a manner acceptable to the County or by the time agreed upon in the Developer's Agreement or amendment thereto, decides that it must apply for the proceeds of the surety, the County shall notify the Applicant of said circumstance in writing and, when possible, allow him forty-five (45) days to correct the deficiencies. Otherwise, the County shall demand the surety proceeds.

g. When the surety is a Letter of Credit issued from a financial institution, the terms thereof shall be indefinite or until completion of the improvements and approval by the County Planning Commission. If, alternatively, the Letter of Credit terminates on a specific date, the Letter of Credit shall provide that the financial institution issue to the County Planning Commission a negotiable draft, in the amount designated, on the business day and immediately prior to the termination of the Letter of Credit, unless:

1. Approval by the County Planning Commission, upon the recommendation of the County Engineer, for the improvements has been previously issued, or

2. Application has been made by the Applicant to the financial institution for extension of the terms of the Letter of Credit and a replacement Letter of Credit extending the termination date has been submitted to and approved by the County Planning Commission, no later than thirty (30) days before the date of expiration.

3. A revised Developers' Agreement has been negotiated with the County Planning Commission to both parties' satisfaction.

h. Nothing herein shall be construed to limit the right of an applicant to contest or question by legal proceedings or otherwise, any determination of the Planning Commission or County Engineer.

i. When the County Engineer's report indicates approval of all required improvements, the bond may be reduced to an amount not less than fifteen percent (15%) of all required improvements, at the inception of the project. One hundred eighty days (180) after completion of the project, a performance inspection shall be

performed. If all is acceptable, the surety shall be released in full. Photos taken by staff at time of inspection will document items completed.

Section 603. General: Subdivision Fees

Reasonable fees for examining plats and other required material shall be proposed by the Planning Commission and approved by the Berkeley County Commission. The amount of fees shall approximate, as closely as possible, the cost of performing the review work. See attached fee schedule in Appendix G.

ARTICLE 7 - REQUIRED IMPROVEMENTS

Section 701 General

Minimum improvements and construction standards required for all Land Development projects shall be as set forth in this Ordinance and in the applicable design standards of other public agencies.

Section 702. Monuments and Markers

A. Monumentation shall be set at the intersection of all lines forming angles in the boundary of the Land Development.

B. A minimum of two (2) monuments shall be placed within each block of a subdivision and shall be designated as control corners. The Planning Commission may require additional monuments at other points.

C. Monuments shall be placed so that the scored or marked point shall coincide exactly with the intersection of the lines to be marked, and shall be set so the top of the monument is level with the surface of the surrounding ground. Monuments may be of the following two types:

1. Cut stone, 6" x 6" x 3' - 0 long with a drill hole in the center.

2. Reinforced concrete, 6" x 6" x 3’ - 0 long with an obvious marking of the center.

D. The applicant shall bear the cost of replacing a disturbed monument or marker until construction of the Land Development is completed or the land in question changes ownership.

E. Monumentation is required for all new or reestablished corners, or reference monument for inaccessible corners, and is encouraged at intervisible points between corners. Set monuments shall be made of durable material and set firmly in the ground. Pipes shall have a minimum inside diameter of one inch (1”), while rebars shall have a minimum outside diameter of five-eighths inch (5/8”) and both shall have a minimum length of thirty inches (30”). Other markers shall have a minimum cross-sectional area of one-half square inch (1/2) and shall be made of durable material, identifiable and unique. Natural objects chosen for corners shall be durable, unique and easily identifiable.

Section 703. Street Signs and Traffic Control Devices

A. The applicant shall erect at every street intersection a street sign or street signs having thereon the names of the intersecting streets. At intersections where streets cross, there shall be at least two (2) such street signs, and at the intersections where one (1) street ends or joins with another street, there shall be at least one (1) such street sign. Street signs shall be of a design approved by Central Dispatch.

B. Traffic control devices shall be in compliance with size, color, location criteria and requirements for the installation of signs and/or signals as set forth by the West Virginia Department of Highways.

Section 704. Street Improvements

A. All streets shall be constructed in conformance with the standards set forth in the West Virginia Division of Highways "Standard Specifications for Roads and Bridges" as modified by "The Manual of Street Standards, Berkeley County, West Virginia" as may be amended from time to time and is attached as Appendix A. Street Improvements shall be reviewed by the Berkeley County Planning Commission and the Berkeley County Engineer. The following standards shall also apply:

1. The proposed plat shall provide for continuation of any existing roads or streets (constructed or recorded) in accordance with adopted highway plans, 911 mapping and WVDOH County Road maps.

2. A tract proposed for subdivision into parcels larger than minimum required building lots and intended for future subdivision rather than immediate development shall be divided so as to allow for future opening of streets and such further logical subdivision as can be foreseen.

3. Developers/landowners are encouraged to coordinate and negotiate with the adjoining developers/landowners to provide interconnectivity of roads between subdivisions. It is desirable to provide internal traffic circulation whenever possible to avoid excessive intersection with State Highways.

4. Local streets shall be designed to discourage speeding traffic.

5. When, in the opinion of the Planning Commission and with the agreement of the applicant, it is desirable to provide street access to adjoining property, the proposed streets shall be extended by dedication to the boundary of such property.

6. Proposed streets and highways shall be adjusted to the contour of the land as far as practicable so as to produce useable lots.

7. Dead-end streets without cul-de-sacs or a turnaround are prohibited except as stubs to permit future extensions to adjoining tracts or where they are designed as cul-de-sacs. Temporary cul-de-sacs, upon approval of the County Engineer, may be constructed without asphalt base or wearing course. The developer may be exempt from providing curbing at the terminus of temporary cul-de-sacs, unless curbs are required for drainage control. A temporary cul-de-sac shall be removed by the applicant and replaced with the permanent street upon extension of the existing street.

8. Cul-de-sacs shall be designed in accordance with Appendix A so as to permit safe ingress and egress. Cul-de-sac streets in excess twenty-five hundred feet (2,500) are prohibited. **(Amended January 10, 2013)**

9. Street names shall be approved by Central Dispatch but names should not be proposed which will duplicate or be confused with the names of existing or platted streets. Proposed streets in alignment with existing or platted streets should bear the names of the existing or platted streets, or names as directed by Central Dispatch.

Section 705. Sidewalks

Sidewalks should be installed in accordance with the criteria set forth in Sections 705.1 and 705.2 if determined by the planning commission. The location shall be approved by the planning commission taking into consideration pedestrian safety. In lieu of requiring sidewalks the commission may require a pedestrian easement in the event a sidewalk would be required in the future. **(Amended January 10, 2013)**

Section 705.1 Sidewalks Required

Except where exempted by the Planning Commission, at least one (1) sidewalk shall be required:

A. On one side of arterial and collector streets to be built at the time of street construction;

B. On one side of all L3 classed streets, to be constructed in conjunction with development of the property;

C. On one side of any industrial street to be constructed at the time of street construction;

D. In all Land Development Units, except Manufactured Home Communities;

E. On one side of streets, which provide direct access to Single Family Attached Dwellings, (Duplex, Triplex, Quadruplex, Town House, etc.)**(Amended January 10, 2013)**

Section 705.2 Sidewalk Design Criteria

Sidewalks shall be designed and constructed in accordance with the following requirements:

A. Sidewalks must be at least four feet (4) wide in single-family residential areas and five feet (5') wide in duplex, triplex, quadruplex, townhouse, and commercial areas..

B. Within twelve hundred feet (1,200') of shopping centers, schools, recreation areas and other high pedestrian traffic areas, sidewalks must be at least six feet (6') wide.

C. Sidewalks must be constructed in accordance with Standards and Details provided by the Berkeley County Engineer, in Appendix A.

D. Where sidewalks are required, a planter strip separation of at least four feet (4') between curb or shoulder and sidewalk.

E. Any pedestrian walk(s) proposed in addition to required sidewalk shall be approved by the County Engineer. Interior pedestrian walks within blocks shall be located in easements not less than ten feet (10') in width.

F. Sidewalks shall be inspected by the County Engineer or his designated agent after the forms have been placed, just prior to the pouring of concrete and after completion of all work. **(Amended January 10, 2013)**

Section 706. Curbs

A. Curbs, when installed, shall be constructed on both sides of the interior streets.

B. Curbs shall be constructed of concrete and sized in accordance with the details in Appendix A. Mountable curb shall be permitted only in townhouse areas.

C. Terminal concrete curb ends shall have an exposed face of two

inches (2”) and be tapered two feet (2’).

D. When curbing is to be removed to construct a driveway or access drive, the length of curbing to be removed shall be carried to the nearest expansion joint or saw cut if the joint is located less than five feet (5’) from the end of the curb removal.

E. Vertical curb height at driveway entrances may be reduced to a minimum of one and one half inches (1 ½”) for driveway entrances along streets where curbs are required.

F. No partial breakout of the curb shall be permitted. No cutting of the curb shall be permitted without approval by the County Engineer.

G. Curb ramps must be installed in accordance with Americans with Disabilities Act (ADA) requirements. **(Amended January 10, 2013)**

Section 707. Culverts

When natural drainage channels intersect any driveway or street right-of-way, the applicant shall have satisfactory culverts and bridges designed and constructed. Where culverts are required, they shall conform to the Design Manual as referenced in the Berkeley County Stormwater Management and Sediment and Erosion Control Ordinance.

Section 708. Water Supply Improvements

The following requirements shall govern water supply provision and improvements:

A. All water supply sources and distribution systems, whether public or individual lot, shall meet or exceed the minimum requirements of the West Virginia Bureau of Health, Environmental Engineering Division in effect at the time of development. The Planning Commission shall require written approval and/or a permit from the West Virginia Bureau of Health, Environmental Engineering Division that the minimum requirements for water supply sources have been met.

B. If the water supply is to be on an individual lot basis and the lot also contains its own sewage disposal system, the well shall be located and constructed according to standards which shall demonstrate/show the production of safe, potable drinking water.

C. The proposed location of the well on each individual lot shall be shown on the plats and satisfactory separation shall be shown between the well and any proposed on-site sewage disposal system. All proposed locations for well and septic systems shall be

approved by the West Virginia Bureau of Health, Environmental Engineering Division.

Section 709. Sanitary Sewer Improvements

The following requirements shall govern sanitary sewage disposal:

A. All sanitary sewage disposal systems, whether public or individual lot, shall meet the minimum requirements of the West Virginia Bureau of Health, Environmental Engineering Division in effect at the time of the development.

The Planning Commission shall require written approval and/or a permit from the West Virginia Bureau of Health, Environmental Engineering Division that the minimum requirements for sanitary sewage disposal systems have been met.

B. When a proposed development is within one thousand feet (1,000') of an existing public sanitary sewer system, connections to the public sanitary system sewers shall be provided to all lots within the proposed development in accordance with State law and regulations, if available and acceptable.

C. When a public sanitary sewer system is not available, a water-carried sewage disposal system approved by West Virginia Bureau of Health to serve the entire Land Development may be installed.

D. If individual, on-lot sewage disposal systems are proposed, written approval from the Health Department must be obtained. Sewage disposal systems drain fields, and any required septic reserve areas shall be setback a minimum of one hundred feet (100') from any known sinkhole or sink.

E. An Underground Injection Control (UIC) permit or rule by the Director shall be obtained from the West Virginia Department of Environmental Protection for Injection wells falling under UIC rules and regulations prior to installation. **(Amended January 10, 2013)**

Section 710. Drainage Improvements

A. All on-site storm water management improvements shall be in accordance with the Berkeley County Storm Water Management and Sediment and Erosion Control Ordinance.

B. A drainage plan shall be submitted with the Preliminary Plan of any Land Development, showing the proposed scheme of all surface

drainage. The construction of all drainage improvements shall be subject to inspection of the County Engineer and approval of the Planning Commission.

Section 711. Storm Sewers and Storm Water Drainage

The Berkeley County Storm Water Management and Sediment and Erosion Control Ordinance is the controlling regulation for all land developments. All applicants must refer to and comply with that ordinance regarding storm water management regulations and requirements. Moreover, nothing contained herein shall be construed to relieve an applicant from any obligation to comply with the Berkeley County Storm Water Management and Sediment and Erosion Control Ordinance, including all policies developed by the County Engineer which are either based upon or which serve to interpret the language contained in the Berkeley County Storm Water Management and Sediment and Erosion Control Ordinance. In addition:

A. Storm sewers, culverts, drainage channels and related installations shall be provided where necessary to:

1. Permit unimpeded flow of natural water courses;

2. Ensure adequate drainage of all low points along streets; and

3. Intercept storm water runoff along streets at intervals reasonably related to the extent and grade of the area drained.

B. In determining the proper drainage of any Land Development, the Planning Commission shall take into consideration and, if possible, make provisions for existing or future drainage problems. As the primary review agency for drainage plans, it shall be the responsibility of the County Engineer to advise the developer and the Planning Commission when additional or supplemental drainage plans and provisions are appropriate, as well as the proper nature and extent of such supplemental drainage plans and provisions.

C. If necessary, due to the applicant's design, the Applicant may be required to extend the storm drainage system beyond the boundaries of the Land Development in order to conduct runoff to an acceptable point of disposal. If so, the Applicant will be responsible for securing all required drainage easements.

D. Lots shall be laid out and graded to provide positive drainage in all directions away from buildings and building sites.

E. In the design of storm drainage installations, special consideration shall be given to the avoidance of problems with erosion and safety, which may arise from concentration of storm water runoff over adjacent properties.

F. All storm drainage systems shall be designed per the requirements as prescribed Berkeley County Storm Water Management and Sediment and Erosion Control Ordinance and its references without overflowing the system at any point.

Section 712. Community Open Spaces and Provision of Recreational Amenities

A. A single-family residential subdivision/development with fifteen (15) or more lots wherein the average lot size is one-half of an acre or less shall include community open spaces for the use and enjoyment of its residents. The community open space shall consist of an area of not less than ten percent (10%) of the total acreage contained in the development parcel but in no case less than five thousand (5,000) square feet. The required open space may be constituted by two (2) or more non-contiguous parcels, so long as the Applicant can demonstrate to the satisfaction of the Planning Commission that all of the open space areas provided are actually usable for passive or active recreational purposes. Where proposed development adjoins an existing or proposed open space, the open spaces should be contiguous to already established open space areas where feasible. The open space areas shall be free of all other easements or encumbrances which would otherwise limit their use for recreational purposes.

Section 713. Off Site Extensions

If streets or utilities are not available at the boundary of a proposed Land Development the applicant may be required, prior to advancement of the Preliminary Plan, to obtain necessary easements or rights-of-way.

Such improvements may be made available for connections by subsequent development of adjoining land.

Section 714. Provisions for Maintenance and Operation

When the Land Development contains park areas, tot lots, streets, or other physical facilities necessary or desirable for the welfare of residents which are of

common use and benefit and which are of such character that:

A. no public body may legally acquire or operate and maintain the facilities;

B. no public body which, if established, could legally operate and maintain such facilities, or;

C. a public body in existence which may legally operate the facilities but refuses or does not desire to operate and maintain the facilities, then the Applicant shall establish, prior to approval of the final plan by the Planning Commission, a homeowners association that will operate and maintain such facilities described above.

Such homeowners association shall be funded by the Developer and shall be sustained by assessment of the property owners. Authority for the homeowners association and the covenants in the proposed deed shall be reviewed and approved by the Legal Counsel to the Planning Commission.

ARTICLE 8 – OFF-STREET PARKING, BUFFERING AND SCREENING

Section 801 Off-Street Parking

Any of the following permitted uses shall be provided with not less than the minimum parking spaces as set forth below in Tables 8-1 A and 8-1B. When the computation of required parking spaces results in a fractional number, any fraction equal to or exceeding one-half (1/2) space shall be counted as one; any fraction less than one-half (1/2) space may be dropped. Parking available in public rights-of-way shall not be considered in determining whether or not the off-street parking requirements of this Article have been met. The additional required off-street parking for Categories 7, 8 and 9 in Table 8-1 below are best provided by consolidating them into private parking lots. The Planning Commission may increase or decrease the parking requirements to provide adequate and proper parking for a proposed use by considering and comparing criteria for other and similar uses as specified in this Article or by reviewing data gathered on existing similar uses.

When a change in intensity of the use of any building would increase the required parking by ten (10) or more spaces cumulatively, from the date of this Ordinance, through an addition or change in the number of dwelling units, gross floor area, gross leasable area, seating capacity or other units of measurement specified herein, the increment of additional parking shall be provided/required in accordance set forth in this Ordinance and all applicable sections.
.
If fewer then ten (10) spaces are required by a change or series of changes in use, the County Planning Commission, upon positive recommendation from County Staff, may waive up to the incremental required number of parking spaces following the guidelines of Section 1203.

The County Planning Commission Staff, with recommendation from the County Engineer, may increase or decrease parking requirements to provide adequate and proper parking for a proposed use not specifically covered in the Tables below, or upon request by an applicant, by considering and comparing other and similar uses as specified in this Article or by reviewing data gathered on existing similar uses. Variations in the number of parking spaces in the tables provided will require a waiver.

Parking requirements based on floor area shall be determined by the gross floor area of the use, excluding storage, mechanical areas, preparation areas and additional common areas such as corridors and stairwells and elevators. **(Amended January 10, 2013)**

TABLE 8-1A

Residential Uses

Land Uses – Residential	Required Parking Spaces
1. Bed and Breakfast	1 parking space for each sleeping room, plus 2 parking spaces for the permanent residents.
2. Boarding House Lodging/Rooming House	1 parking space for each sleeping room, plus 2 parking spaces for the permanent residents.
3. Group Home	1 parking space for each sleeping room, plus 2 parking spaces for the permanent residents.
4. Congregate Care Residence	1.5 parking spaces for each congregate care unit, plus 1 parking space for each employee on the largest work shift.
5. Continuous Care Retirement Community	1.5 parking spaces for each dwelling care unit, plus 1 parking space for each sleeping room, plus 1 parking space for each employee on the largest work shift.
6. Nursing/Convalescence Home	1 parking space for every three (3) beds plus one (1) parking space for every 400 square feet of administration area.
7. Multi-family Dwelling/Apartments	2.5 spaces for each apartment; plus, one (1) parking space for each on-site employee; plus 10% additional spaces for guests. **(Amended January10, 2013)**
8. Single Family Attached Dwelling	3 parking spaces for each dwelling unit. For the purposes of this Ordinance, when one or two parking spaces are required for dwellings, an attached or unattached garage or carport (minimum 10'X 18'), on the premises shall be considered as parking space. A minimum of 1 parking space per dwelling unit must be provided off-site.

9. Single Family Detached Dwelling	2 parking spaces for each dwelling unit. For the purposes of this Ordinance, when one or two parking spaces are required for dwellings, an attached or unattached garage or carport (minimum 10'X 18'), on the premises shall be considered as parking space. 1 additional external parking space per dwelling unit must be provided.

Table 8-1B.

Non-residential Uses

Land Uses – Non-residential	Required Parking Spaces
1. Hospital	1 parking space for every three (3) hospital beds plus one (1) parking space for every 400 square feet of administration area.
2. Hotels and Motels	1 parking space for each guest room plus 1 space for every 2 employees of the largest work shift.
3. Industrial Uses	1 parking space for every 600 square feet of gross floor area used for industrial purposes (processing, assembly, treatment, storage, fabrication, etc.) or one (1) parking space for every two (2) employees on the two largest shifts, which ever is greater plus 1 parking space for every 400 square of office/administration area.
4. Laundromat	1 parking space for every three (3) washing machines.
5. Library, Museums. Galleries, Places of Worship	1 parking space for every 400 square feet of gross floor area.
6. Membership Organizations, Civic and Fraternal Organizations, Clubs	1 parking space for every 400 square feet of office area plus 1 space for every 50 square feet of assembly area.
7. Medical Center (Clinic)	1 parking space for every 200 square feet of gross floor area.
8. Office Building, Professional Office, Business	1 parking space for every 200 square feet of gross floor area.

9. Office Building, Banks and other office activities with moderate to heavy use	1 parking space for every 300 square feet of gross floor area PLUS five (5) reservoir spaces for each drive-up window exclusive of driveways or access areas**. (Amended January 10, 2013)**
10. Personal Services (Barber Shop, Beauty Shop, etc.)	Minimum of 3 spaces. For barber shops and beauty shops, 2 parking spaces for each operator chair. (Note: Chair does not include dryer chairs, washing/rinsing chairs, or waiting area chairs.)
11. Public Stable	1 parking space for every four (4) horse (animal) stalls.
12. Public Utilities and Facilities	1 parking space for every 400 square feet of gross floor area plus 1 parking space for each stored vehicle.
13. Recreation Areas	
a. Athletic Fields	20 parking spaces for each field.(On-street parking on local streets can qualify for required parking for public fields)
b. Basketball Courts	5 parking spaces for each court.(On-street parking on local streets can qualify for required parking for public courts)
c. Bowling Alley	3 parking spaces for each alley.
d. Campground	1 gravel parking space for every campsite.
e. Golf – Regulation, Golf-Driving Range, Golf-Miniature	6 parking spaces for each golf hole. 2 Land Uses - Non-residential parking spaces for each driving tee. 3 parking spaces for each golf hole.
f. Park	2 parking spaces for each acre.(On-street parking on local streets can qualify for required parking)
g. Rifle or Archery Range	1 parking space for each target area.
h. Skating Rink (Indoor or Outdoor)	1 parking space for every 100 square feet of skating area.
i. Swimming Pool	1 parking space for every 20 square feet of swimming pool surface area plus 1 parking space for every 300 square feet of building area.
j. Tennis and Racquetball Courts	2 parking spaces for each court, plus one (1) parking space for every 200 square feet of clubhouse and non-court floor area.

k. Theaters/Auditoriums	1 parking space per every two (2) seats.
14. Restaurant/Tavern	1 space for every 100 square feet of gross floor area or 1 space for every two (2) persons allowed within the maximum occupancy, whichever is less. **(Amended January 10, 2013)**
15. Restaurant - Fast Food, Carry out, Deliveries	
a. Restaurant with Seating	1 parking space for every 50 square feet of gross floor area or 1 parking space for every two (2) persons allowed within maximum occupancy, whichever is less. **(Amended January 10, 2013)**
b. Restaurant without Seating	1 parking space for every 100 square feet of gross floor area with a minimum of ten (10) spaces.
c. Restaurant with Drive Through	In addition to the spaces required above, eight (8) stacking spaces for the drive-in window with a minimum of five (5) of these for the ordering station. Such spaces shall be designed to not impede pedestrian or vehicle circulation on the site or abutting street.
16. Retail, General	
a. Under 2,000 square feet	1 parking space for every 250 square feet of gross floor area.
b. 2,000 to 75,000 square feet	1 parking space for every 275 square feet of gross floor area.
c. Over 75,000 square feet	1 parking space for every 300 square feet of gross floor area.
17. Retail, Grocery and Convenience Store	1 parking space for every 200 square feet of gross floor area.
18. Schools (Private)	
a. Elementary. Secondary	1 parking space for each classroom plus 1 space for every 400 square feet of administrative floor areas or 1 parking space for each six (6) seats in an auditorium or other places of assembly, whichever is greater.
b. High School	2.5 parking spaces for each classroom plus 1 parking space for every 400 square feet of administrative floor areas or 1 parking space for every six (6) seats in an auditorium or other places of assembly, whichever is greater.

c. Trade, Technical	1 parking space for every two (2) students based on the design capacity of the building(s) plus 1 parking space for every 400 square feet of administrative floor area.
d. Studios (Art, Dance, Karate, etc.)	1 parking space for every 300 square feet of gross floor area.
19. Self-Service Storage Facility	1 parking space for each employee.
20. Veterinary Services/Hospital	1 parking space for every 500 square feet of gross floor area.
21. Warehousing, Trucking	1 parking space for each two (2) employees on the two largest shifts.
22. Child Care Facility	1 parking space for every two (2) employees during operational hours. **(Added January 10, 2013)**

Section 801.1 Design and Construction Standards

All off-street parking areas shall conform to the following standards (See illustration in Appendix A):

1. Parking Spaces

   All parking spaces per vehicle shall be not less than nine feet (9') wide and eighteen feet (18') long, except handicapped, and conform to requirements provided on Table 8-2 below.

2. Aisle Widths in Parking Lots

   For angled parking spaces in parking lots, stall dimensions and parking lot aisle dimensions shall be not less than those listed in Table 8-2 below. The depth of any parking stall may be reduced by two feet (2') for any space that directly abuts a vegetated, unobstructed buffer area that allows vehicles to overhang.

TABLE 8-2 - Park Space and Aisle Widths

Angle of Parking Spaces	Parking Space Stall Width (Feet)	Parking Space Stall Depth* (Feet)	Parking Lot Aisle Width - One-Way Isle (Feet)	Parking Lot Aisle Width Two-Way Aisle (Feet)
90 Degrees	9	18	18	24
60 Degrees	9	18	18	20
45 Degrees	9	18	13.5	20
30 Degrees	9	18	12	20
Parallel	8	22	12	20

*Depth of parking space stalls is the measurement from the curb or edge of the parking space toward the interior portion of the space to be occupied by a parked vehicle and does not include any part of the aisle or driveway.

3. Entrances, Circulation, Vehicle Movement

   a. No parking shall be provided or permitted along the circulation roads or exit and entrance drives. Roads shall be uniform in width, smooth flowing, and provide for ninety (90) degree intersections wherever possible.

   b. Entrance and exit drives shall be a minimum of eighteen feet (18') wide for any one way use and a minimum of twenty-five feet (25') wide for two way use. Fire lanes shall be provided where determined necessary by the County Engineer and shall be a minimum of twenty-five feet (25') wide.

   c. All dead end parking lots shall be designed to provide sufficient turn around area for the end stalls of the parking area as detailed in Appendix A.

   d. Parking lot areas shall be designed so that each motor vehicle may proceed to and from the parking space provided for it without requiring the moving of any other motor vehicle.

   e. Off-street parking areas, when required, for buildings with three (3) or more dwelling units shall have no more than one (1) ingress and/or one (1) egress from any public street per building.

4. Multi-family dwelling units and non-residential uses

   Parking lots and spaces for multi-family dwelling unit structures, and non-residential uses shall be readily accessible to the buildings served. Such parking spaces shall conform to the following requirements:

   a. Required parking lots and parking spaces shall be linked to the principal use which they serve by sidewalks and shall be located within one hundred fifty feet (150') of the principal building or use.

   b. Required parking spaces for a building or use may be located across a street with the following conditions:

      (1) A crosswalk shall be constructed to ensure safe pedestrian access to and from the parking lot. The design of the cross walk shall consider the speed limit, sight distance, visibility, road conditions, and other safety factors.

      (2) Safety lighting shall be provided at the crosswalk to

illuminate the cross area when the parking area is used in early morning or at night.

(3) A sign shall be provided on each side of the road to warn oncoming vehicles of the presence of the crosswalk.

c. The distances specified herein shall be measured from the nearest point of the parking lot to nearest point of the principal building or use for which the parking lot is to serve.

5. Semi-Trailer Truck Parking Spaces

Where truck parking is required to be provided, the minimum width of a truck parking space shall be twelve feet (12') and the minimum depth shall be sixty feet (60'). Aisle widths in truck parking lots shall be fifty-five feet (55').

6. Setbacks from Buildings, Lot Lines, Buffers and Street Right-of-Way

a. All surface parking spaces for any multiple dwelling building, office, commercial, institutional, industrial, and other similar non-residential buildings located on the lot shall provide a minimum of five (5) foot unobstructed pedestrian access walkway between the parking area and building.**(Amended January 10, 2013)**

b. All parking spaces and access drives shall be at least eight feet (8') from any exterior lot line, except where a buffer yard is required. In that situation, the parking lot shall be at least two feet (2') from the buffer yard.

c. Except at designated entrance and exit drives, parking areas shall be physically separated from any public and/or private street right-of-way by a minimum ten feet (10') vegetative planting strip. In no case shall parking areas be designed to require or encourage cars to back into a through street in order to leave the parking area.

d. No off-street parking area shall be located within a West Virginia DOH public right-of-way.

7. Handicapped Parking

Paved handicapped parking spaces shall be provided for all uses, with the exception of single family attached, single family detached and two-family residential uses, and shall comply with the location, size, marking, and ingress and egress requirements set forth herein. Each reserved parking space for the physically handicapped person shall be not less than eight feet (8') wide and shall include a minimum five foot (5') wide aisle to allow for wheelchair access. The number of accessible parking spaces required is provided on Table 8-3 below.

In addition to the number of accessible parking spaces required in Table 8-3, spaces shall be provided to accommodate vans. Parking for vans shall be at the rate of one (1) in every six (6) handicapped accessible parking spaces required in Table 8-3. Each reserved van parking space shall be not less than eleven feet (11') wide and shall include an eight foot (8') wide aisle to allow for wheelchair access. If only one (1) accessible parking space is required it shall be a van parking space.

TABLE 8-3 Handicapped Accessible Parking Space

Total Number of Parking Spaces In Parking Lot	Required Number of Handicapped Accessible Parking Spaces
Up to 25	1
26 to 50	2
51 to 75	3
76 to 100	4
101 to 150	5
151 to 200	6
201 to 300	7
301 to 400	8
401 to 500	9
501 to 1000	2 % of Total Parking Spaces
Over 1000	20 spaces plus 1 for every 100 parking spaces over 1000
In all cases, minimum standards for handicapped parking shall comply with current American National Standards Institute (ANSI) criteria.	

8. Parking Lot Lighting

   a. All multi-family and non-residential parking areas shall be adequately lighted during after dark operating hours.

   b. Any lighting used to illuminate off-street parking areas, shall be full cut-off and reflect the light away from adjacent properties and public right-of-way. Light standards shall be protected from vehicular traffic by curbing, concrete barriers or guard rail.

9. Curb Radii

   Where curbs are provided in parking lots for light standards and islands, a minimum five-foot (5') radius curvature shall be required at the face of all curb lines.

10. Parking Lot Surfacing

All off-street parking areas shall be paved. All driveways which provide ingress and egress to off-street parking areas which enter or exit onto an improved street shall be paved in accordance with West Virginia Division of Highway specifications, as amended.

An alternative surface to pavement may be approved for overflow parking areas.

11. Parking Lot Landscaping

Parking areas shall have landscaping strips of a minimum width of ten feet (10') and depth equal to the parking stalls in order to separate the parking spaces from the entrance and exit drives and circulatory roads.

In addition, all parking lots with twenty (20) or more spaces shall be provided with interior landscaped areas equal to ten (10) square feet for each parking space, excluding those spaces located directly along the perimeter for which landscape screens may have been otherwise provided. The intent of this subsection is to require landscaping within parking lots; therefore, landscaping screens, planting strips and landscaping surrounding buildings shall not be considered as parking lot interior landscaping.

a. The interior landscaping shall have a minimum area of fifty (50) square feet. The interior parking lot landscaping shall be designed to receive parking lot storm water flows, delineate driving lanes, define rows of parking lot and generally to mitigate the visual impact of parking lots. **(Amended January 10, 2013)**

b. The interior parking lot landscaping shall be composed of a combination of shrubs and trees. At least one shade or ornamental tree shall be required for each twenty (20) parking spaces.

c. In order for the Planning Commission Staff to determine compliance with the requirements of this Section, a plan shall be submitted showing the proposed design of the interior landscaping. Said plan shall include a plant schedule and sufficient information as required for the installation of the landscaping.

12. Service Traffic

    Customer and service traffic shall be separated whenever possible. Loading and unloading areas shall be located as not to interfere with customer parking areas.

13. Fuel dispensing facilities and drive-thru services

    Queuing areas shall be designed so as not to interfere with normal traffic flow or required parking.

14. Parking Lot Isle Length

    Parking isles shall not be longer than three hundred (300') feet without providing a circulatory road.

15. Traffic Control

    Entrance and exit arrangements, acceleration and deceleration lanes, public access roads and traffic signals may be required, upon recommendation of the County Engineer using AASHTO and WVDOH standards, depending on the size of the development complex, the anticipated traffic, and the condition of the public roads.

16. Parking Area Permitted

    Large parking lots shall be divided into parking areas which should not exceed three hundred feet (300') long and a width of four (4) parking lanes or two hundred forty feet (240'). These areas shall have their entire perimeter defined by curbs, walks, landscaping strips, or other divides to control traffic to the parking lanes.

17. Marking

    Parking spaces shall be defined by lines painted or so marked with a road surface tape with a minimum width of four inches (4").

Section 801.2 <u>Loading and Unloading Spaces</u>

1. In addition to the off-street parking requirements set forth herein, any building erected, converted, or enlarged for commercial, office, manufacturing, institutional, hospital, or other similar uses requiring the delivery or pick up of products or materials shall provide adequate off-street areas for the loading and unloading of vehicles. Such areas shall be provided for as shown on Table 8-4 on page 8-12.

2. All off-street loading and unloading areas shall be provided and maintained so long as the use exists which the facilities were designed to serve.

3. Off-street loading facilities shall be designed to conform to the following specifications.

   a. Each required berth shall be not less than twelve feet (12') in width, forty-five feet (45') in length and fourteen feet (14') in height, exclusive of drives and maneuvering space, and located entirely on the lot being served. For uses that are less than five thousand (5000') square feet in gross floor area, the dimension of the required loading space may be reduced to thirty-six feet (36') in length by fifteen feet (15') in width.

   b. There shall be appropriate means of access to a street or alley, as well as adequate maneuvering space. Maneuvering space for tractor trailer shall be a minimum of seventy-five feet (75').

   c. All accessory driveways and entrance ways shall be graded, surfaced and drained in accordance with applicable codes and ordinances of the County.

   d. The area of a loading berth or space and its driveways shall be graded, surfaced with an impervious surface (e.g. asphalt or concrete) or other stable material and drained in accordance with this Ordinance.

   e. Parking and Loading areas shall be kept open and free from obstruction, product display or other accessory type uses. Loading areas, when in the opinion of the County Engineer safety is not compromised, may be placed in remote parking lot drive aisles.

TABLE 8-4

Land Use	Gross Floor Area (Square Feet)	Required Loading Spaces
Commercial, wholesale, manufacturing, hospitals, institutional,	Under 5,000	36' x 15' (Optional)
	Under 8,000	1
	Over 8,000 to 40,000	2
	Over 40,000 to 100,000	3
	Over 100,000 to 250,000	4
	Each addition 200,000	1
Office Buildings or hotel/motels	Under 100,000	1
	Over 100,000 to 300,000	2
	Over 300,000	3

Section 801.3 Changes in Requirements

1. Existing Parking

Buildings and uses in existence on the effective date of this Ordinance shall not be subject to the requirements of this Article, except those required by ANSI, unless the use of the building is changed. Parking facilities now serving such buildings and uses shall not in the future be reduced.

2. Changes in Requirements

Whenever there is an alteration of a building or a change or extension of a use which requires additional parking spaces to conform to the requirements of the Ordinance, the total additional parking required for the alteration, change or extension shall be provided in accordance with the requirements of this Ordinance.

Section 801.4 Continuing Obligation

All required parking facilities shall be provided and maintained so long as the use exists which the facilities were designed to serve. Off-street parking facilities shall not be reduced in total number of spaces or area after their provision, except upon the approval of the County Planning Commission and then only after proof that, by reason of a decrease in floor area, seating area, number of employees or change in other factors controlling the regulation of the number of parking spaces, such reduction is in conformity with the requirements of this Article. Reasonable precautions are to be taken by the owner or sponsor of particular uses to assure the availability of required facilities for the employees or other persons whom the facilities are designed to serve. They shall at no time constitute a nuisance, hazard or unreasonable impediment to traffic.

Section 802 Minimum Buffer and Screening Requirements

Section 802.1 Buffers

Buffers required by this Ordinance are intended to separate different land uses from each other at a reasonable distance in order to minimize or eliminate potential nuisances such as dirt, litter, noise, glare, signs, buildings, parking areas. Buffers are also intended to provide spacing between uses and structures to reduce the adverse impacts of noise, light, odor or danger from fire and explosions.

a. General Buffer Requirements

i. A buffer, when and if required by this ordinance, shall be provided along the perimeter of a lot for any given use and shall not be located in any portion of a public right-of-way or proposed right-of-way.

ii. Buildings shall not be permitted in a buffer yard.

iii. Parking lots and parking spaces shall not be permitted in a buffer yard.

iv. Storage of any kind shall not be permitted in a required buffer yard.

v. Stormwater management facilities, public utility facilities, picnic areas, or pedestrian walkways and sidewalks shall be permitted in a buffer yard.

vi. A buffer may be part of a front, rear or side yard.

b. Land Use and Buffers

i. Buffer area and screening in accordance with Section 802.2 and Table 8-5 shall be provided by the developer of the project during the sketch plat phase, as follows:

a) A buffer of twenty-five feet (25') shall be required between a commercial use and a residential use. Screening shall be provided in the buffer.

b) A buffer of twenty-five feet (25') shall be required between a multi-family residential use and a single family/two family residential use. Screening shall be provided in the buffer.

c) A buffer of one-hundred feet (100') shall be required between any industrial use and a residential use. Screening shall be provided in the buffer.

d) A buffer of twenty-five feet (25') shall be required between any industrial use and a commercial use or public right of way. Screening shall be provided in the buffer. **(Amended January 10, 2013)**

Section 802.2 <u>Screening</u>

Screening and screens required by this Ordinance are intended to provide an effective visual barrier at the street level between conflicting uses. This section provides standards and options for the design, and installation of plants, fences and walls in the County in accordance with the following guidelines:

a. Table 8-5, "Screening Requirements," outlines below the screening required by this Ordinance. The Screening Options on page 8-17 describe the various options for screening. Screening options 1, 2, 3 and 4 provide flexibility to the applicant through various combinations of evergreen and deciduous trees, hedges, fences, and walls for screening. The suggested alternatives are screening

alternatives A and B available for negotiation as necessary. All standards for screening shall be met at the time of planting except that a hedge is expected to reach a mature height of six feet (6').

b. All required tree planting and landscaping used for screening shall comply with all landscaping requirements of this Ordinance. All physical and vegetative screening shall be maintained in good condition, repaired and replaced by the property owner when deemed necessary by the County Planning Commission.

c. The County Planning Commission may approve a different screening plan if in its opinion such a plan is warranted and acceptable.

TABLE 8-5 Screening Requirements

Options	Requirements	Minimum Size	Minimum Spacing
1	Wall	6 feet in height	N/A
	Deciduous trees	2" in caliper	N/A
2	Hedge	6 feet in height	N/A
	Evergreen trees	4 feet in height	Ten (10') feet on center
3	Evergreen trees	6 feet in height	Ten (10')feet on center
	Deciduous trees	2" in caliper	Fifteen (15') feet on center
4	Fence	6 feet in height	N/A
	Hedge	6 feet in height	N/A
Alternatives			
Alternative A	Wall/Fence	6 feet in height	N/A
	Evergreen trees	4 feet in height	Ten (10') feet on center
	Hedge	2 feet in height	N/A
Alternative B	Berm constructed 3 feet in height with ground cover	NA	Maximum 3:1 slope
	Evergreen trees on prescribed side of berm	6 feet in height	Six (6') feet on center
	Wall/Fence on top of berm	3 feet in height	N/A
Alternative C	Negotiated between applicant and the Planning Commission		

Section 802.3 Dumpster Screening

A. Outside commercial trash, refuse or recycling dumpsters shall be located within a three-sided enclosure sufficient to screen such containers from sight from all adjacent properties and from any adjacent roads, streets or other access ways.

B. Where more than one residential unit makes use of outside trash, refuse or recycling dumpsters, cans, bins or other containers or when more than one residential unit makes use of an area designated for such containers, then either the container(s) or the area shall be screened by an enclosure from all adjacent properties and from any adjacent roads, streets or other access ways. Screening is permitted within the Building Restriction Lines (BRL's). **(Amended January 10, 2013)**

Screening Options
1-4

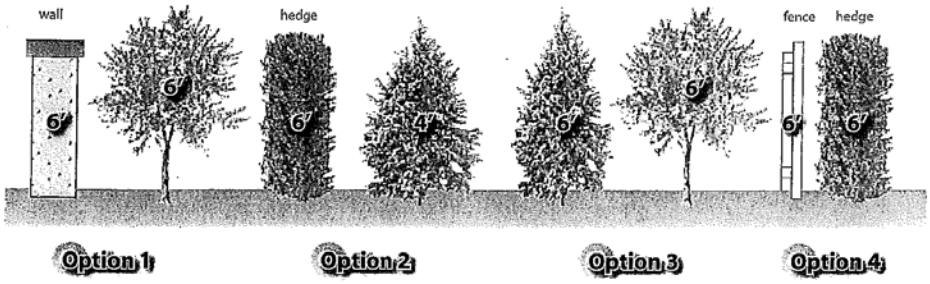

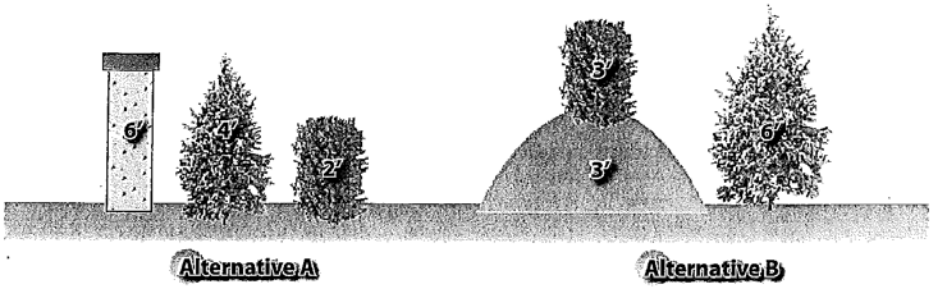

Screening Alternatives
A and B

at the recommendation of the
Planning Commission Staff

ARTICLE 9 – PUD's - PLANNED UNIT DEVELOPMENTS

Section 9.01 General Provisions

The purpose of this article is to encourage the planned development of land in larger parcels. Large development units require intensive private planning and capital investment to achieve smooth traffic flow, provide infrastructure, and create adequate residential services. They comprise an essential aid to local governments to meet the challenges posed by rapid growth. Planned Unit Developments promote economical and efficient use of the land and provide for diversity in housing choices with varied levels of community amenities and adequate open spaces appropriate to the community they serve. The intent of these "PUD" regulations is to permit greater flexibility and more creativity in the design and development of residential and commercial areas than is possible under conventional standards.

Definition of PUD: A planned unit development for purposes of this Ordinance shall be defined as a mixed-use community, which utilizes one (1) or more of the below housing options in combination with at least one (1) of the Commercial or Recreational amenities:

1. Single-family detached housing
2. Single-family attached housing
3. Multi-family housing
4. Commercial
5. Recreational amenities such as golf courses, swimming pools, tennis courts, or other major recreational facilities, exclusive of small neighborhood play areas. **(Amended January 10, 2013)**

Section 9.02 Requirements for Planned Unit Development

A. Ownership: The tract of land to be approved for development as a "PUD" must be in single ownership with proof of that ownership submitted to the Planning Commission by no later than review and recommendation for advancement of the sketch plan. Equitable ownership arising from binding contracts to purchase, subject to development approvals, meets the requirement of this section.

B. The specific site shall be located adjacent to adequate roadway facilities capable of serving existing traffic, and of being upgraded to serve future increased traffic generated the existence of the "PUD".

C. All "PUDs" shall be served with public water and public sewer meeting the requirements of public utilities of this Ordinance and of the West Virginia State Department of Health and providing sufficient storage, flow capacity, and fire hydrants to meet the requirements of the Insurance Service Office.

Section 9.03 Review and Approval Process

Flexibility in site design is inherent in the "PUD" process. The Planning Commission may modify specific requirements and may establish other requirements deemed necessary to satisfy the purpose of this Article.

The review and approval of "PUDs" is a multi-step process. Those steps are:

1. Sketch Plan Review and Public Hearing
2. Preliminary Plan Review and Advancement to Final Plan Review
3. Final Plan Review, Public Hearing and Approval

Following sketch review, the review of the development plans may be combined when appropriate for smaller developments.

The Sketch Plan, the Preliminary Plat, and Final Plan shall be prepared by a licensed architect, a licensed landscape architect, a professional engineer, or a licensed surveyor (licensed to practice in West Virginia), to the extent, each is allowed to practice by law.

A. Design and Development Schedule: It is the intent of this Ordinance that the "PUD" not be a speculative device. The Sketch Plan as submitted by the applicant shall reflect the actual development to be designed and constructed within an anticipated time frame. Each phase of the design and development review process must occur within specified periods. If the applicant fails to submit his plans, or if construction does not commence, the "PUD" as specified by this Ordinance, shall automatically be voided unless a revision to the schedule has been granted by the Planning Commission.

1. Sketch Plan Submission and Review: The developer shall submit to the Planning Commission the sketch plan. The purpose of the sketch plan review is to provide an exchange of information between the developer and the Planning Commission staff. The intent is that the developer provide the Planning Commission staff with general information for the layout, range of density, range of residential and commercial allocation, specific uses, and anticipated development schedule. The Planning Commission shall within thirty (30) days hold a public hearing once the application is adjudged to be an official submission.

2. Preliminary Plan Review and Advancement: The applicant shall submit the Preliminary Plan within one (1) year of the sketch plan being adjudged to be complete by the Planning Commission. Requests for extension may be granted by the Planning Commission for good cause. In determining whether advancement should be given to the Preliminary Plan, the Planning Commission at its public meeting shall be guided by the design standards set forth in this Ordinance.

   Advancement of a Preliminary Plan by the Planning Commission shall have the meaning as set forth in Section 305.3 of this Ordinance.

3. Final Plan Review and Approval: Following advancement of the Preliminary Plan, the applicant shall submit the Final Plan within one year for Planning Commission review. The site plan review shall be for the entire "PUD", or for any individual phase or phases of the project.

   Requests for extension may be granted by the Planning Commission for good cause. The Final Plan shall be approved or disapproved, or held by the Planning Commission, as set forth in in Section 306.2 of this Ordinance.

Section 9.04: Content and Format of Application

Sketch Plan: Please refer to Article 4, Section 401 for requirements.

These standards are intended to ensure that the "PUD" is compatible with neighboring properties and that it provides a quality living environment for its residents. The standards established for any "PUD" are considered prima facia to be acceptable to the developer and may not be the subject of appeal for a waiver.

A. Density:

The maximum gross density for a "PUD", but not for individual elements within the "PUD" is ten (10) dwelling units per acre. In determining the specific density for a particular "PUD" or for any particular phase of a "PUD", the Planning Commission shall give consideration to and shall make findings of fact concerning, at a minimum, the impact of the proposed development on adjacent properties, the availability of public facilities, the impact of proposed development on public roadways, the impact on public schools, fire and police protection, and the availability of adequate open space.

In making these determinations, planning commissions shall not unduly withhold approval where these services can be provided in an orderly manner, over time, to accommodate expected growth.

B. Tract Size:

There shall be no minimum tract size for a "PUD". However, the tract size and shape shall be appropriate for the development proposed as determined by the Planning Commission.

C. Open Space:

Open space shall comprise an area of at least fifteen percent (15%) of the proposed residential acreage. Such open space shall include land to be developed as recreational areas or for the use of occupants of the Planned Unit Development, but shall not include streets, off-street parking areas, or storm water management/retention ponds. The County must be furnished satisfactory evidence as a condition for approval that such open space area will be continued and that perpetual maintenance is provided for. Maintained and operating golf courses shall be counted as open space for the purpose of this section; however, additional open space to accommodate all age groups within a planned unit development shall be negotiated at the time of sketch plan review.

D. Landscaping:

All Land Development Plans shall contain a schedule for landscaping. The landscaping schedule shall contain a planting schedule and a listing of landscaping materials to be installed. Trees, shrubs, and other ground cover are expected to be so designed as to provide enhancement of the overall layout. Landscaping shall be considered an integral part of the "PUD" rather than an optional amenity.

E. Buffer Requirements:

Buffer requirements are intended to protect existing or future development adjacent to a proposed "PUD" from potentially adverse effects.

1. Non-residential uses, except parks and golf courses, in the "PUD" shall have a fifty-foot (50') buffer yard along the common boundary with any adjacent lot either within or outside of the "PUD" that is proposed or is occupied by a residence. Existence of a street between residential and non-residential uses meets the buffer requirement of this section.

2. Any multi-family residential use, excluding townhouses, shall be provided with a fifty-foot (50') setback along its common boundary with any lot proposed for, or occupied by a single family detached dwelling either within or beyond the boundaries of the PUD.

3. No structure, materials storage, or vehicular parking may be permitted in the buffer yard.

4. Buffer yards shall include adequate screening in accordance with Article 8.

F. Walkways:

1. Pedestrian connectors shall be installed for connections between residential and non-residential portions of the PUD. The method of connection shall be negotiated with the Planning Commission at the Sketch Plan stage in order to safeguard the privacy of residential units, and provide pedestrian connections for the convenience and safety of residents.

2. When a proposed multi-family residential development is located adjacent to an existing public transit route or where students require school bus transportation, a bus waiting area consisting of an impervious surface shall be provided at such location as determined by the Planning Commission and the applicable transportation or education agencies.

G. Building Spacing and Height Requirements:

In review of a PUD, the Planning Commission may negotiate the area, yard, height and other design requirements if such modification will increase the amenities of the development or foster desirable diversity in architectural and community design.

H. Non-Residential Development:

1. In general, non-residential development proposed as part of a "PUD" shall be integral to the overall development and shall relate well to residential areas in terms of pedestrian and vehicular circulation. Setback requirements between non-residential and residential uses within a PUD shall be as provided in this Article.

2. The gross area for commercial uses shall be jointly negotiated

between the applicant and the Planning Commission taking into account the character and location of the PUD. Commercial uses shall not be built or established prior to the residential development without the prior approval of the Planning Commission. Commercial uses may be built in phases consistent with phasing of the residential construction.

3. The Planning Commission may approve innovative and well-designed proposals for the sharing of buildings or parking areas by compatible residential and non-residential uses whenever it can be demonstrated to the satisfaction of the Planning Commission that such sharing is a logical and efficient use of buildings and land, and that the peak operating hours for the respective uses will not be in conflict.

I. Traffic Circulation and Parking:

1. The Planning Commission shall determine that existing streets outside of a PUD are of sufficient capacity or are capable of being upgraded to serve existing traffic and all new traffic when fully developed. New streets, within PUDs shall be designed and constructed to handle all expected traffic when the PUD is fully built out.

J. Phasing:

Different phases of the PUD may have different densities, so long as the overall density of the Sketch Plan is followed and intent of the Sketch Plan is carried out.

ARTICLE 10 – MANUFACTURED/MOBILE HOME COMMUNITY

Section 1001. General

Manufactured/Mobile Home Communities, whether the individual lots are to be leased or sold shall comply with the requirements as set forth in this Ordinance and applicable sections of these articles.

Section 1002. Design Standards

The following design standards shall apply to all Manufactured/ Mobile Home Communities.

1. Each Manufactured/ Mobile Home Community shall contain a minimum of five (5) acres, including open space.

2. Each Manufactured/ Mobile Home Community shall have a minimum buffer area of twenty-five feet (25') or more around the perimeter of the property. Such buffer area shall not be occupied by or counted as part of any individual lot.

3. Each Manufactured/Mobile Home Community shall be provided with a common entrance or entrances. Access to all homes within a Manufactured/Mobile Home Community shall be from streets within the Manufactured/Mobile Home Community. In no case shall a home in any Manufactured/Mobile Home Community have individual, direct access to any public street or highway.

4. Layout of Lots

   Individual lots shall abut a street. Side lot lines laid out in rectangular blocks shall be diagonal to the street at an angle no greater than thirty (30) degrees from perpendicular. Front and rear lot lines in rectangular blocks shall be straight and continuous.

   In cul-de-sac arrangements, the side lot lines shall be radial to the street lines.

   Corner lots for Manufactured/Mobile Homes shall have the home situated to permit the required building set back from both streets and allow proper sight distance.

5. Each lot shall be a minimum of seventy-five hundred (7,500) square feet. Minimum lot width shall be seventy-five feet (75'). Each lot shall be clearly defined by monuments or markers in accordance with the requirements of this Ordinance.

6. Each lot shall be designed to fit the dimensions of the Manufactured/Mobile homes anticipated as well as provide all public utilities, pads, hookups, appurtenant structures and other appendages.

7. Setbacks of Manufactured/Mobile home pads may vary, subject to plat review by the Planning Commission. In no case shall the setback be less than twenty-five feet (25') from any street, common parking area, common use area, or built structure within the Manufactured/Mobile Home Community.

8. Front, Side and Rear setbacks shall be a minimum of ten feet (10') in width for each lot. If the rear of an individual lot abuts the twenty-five foot (25') perimeter buffer area, then the rear setback may be reduced to five feet (5').

Section 1003. Manufactured/Mobile Home Pad

All occupied homes shall be situated on a pad.

Each pad shall be constructed so as to comply with the requirements of the State Building Code, as adopted by Berkeley County.

Section 1004. Streets

All streets in Manufactured/Mobile Home Communities shall meet the requirements set forth in this Ordinance. Curbs and gutters are not required for Manufactured/Mobile Home Communities.

Section 1005. Off-Street Parking

Off-street parking shall be provided in accordance with the requirements set forth in this Ordinance as a residential street using the appropriate anticipated traffic counts for the street classifications.

Section 1006. Water and Sewage

Each Manufactured/Mobile Home pad shall be provided with a connection to a water and sewer system approved by the Berkeley County Public Water Service District, Berkeley County Public Sewer Service District, or the Department of Health, Environmental Engineering Division.

Section 1007. Utilities

All telephone, electrical and other distribution lines shall be installed in underground conduits. No overhead lines shall be permitted. All underground

utilities, sanitary sewers and drainage structures installed in streets shall be constructed prior to the surfacing of such streets.

Section 1008. Buffer strips, Screening and Landscaping

Screening will be provided within a buffer area twenty-five feet (25') in width along the entire perimeter of the Manufactured/Mobile home community in order to separate the Manufactured/Mobile home community from the adjacent land uses and roadways. Screening for the manufactured/mobile home park shall include one of the following screening options provided on Table 10-1.

Table10-1 – Screening

Options	Minimum Tree Size	Maximum Spacing Distance
Option 1		
Wall/Fence	6' in height	NA, with
a Hedge	6' in height	NA
Option 2		
A Hedge	6' in height	NA, plus
Evergreen Trees	4' in height	10' on center
Option 3		
Evergreen Trees	6' in height	6' on center, plus
Deciduous Trees	6' in height, 2" caliper	15' on center

Section 1009 Accessory Structures

Accessory structures shall be permitted in the rear yard no closer than five feet (5') from the rear or side lot lines of individual lots.

Section 1010. Solid Waste Disposal

Outdoor collection stations shall be provided for garbage and trash removal when curbside collection is not provided. Collection stations shall be located to avoid being offensive and shall be screened from view and landscaped.

ARTICLE 11: RECREATIONAL VEHICLE PARKS & CAMPGROUNDS

Section: 1100. General

Recreational vehicle parks and campgrounds are intended to provide temporary sites for staying outdoors.

Section: 1101. Design Standards

1. Each campsite shall contain a minimum of twelve hundred, (1,200) square feet of space.
2. Camping units, including canopies and similar appurtenances, shall be separated from other camping units on adjacent sites, all campground buildings and structures by a minimum distance of ten feet (10').
3. There shall be at least ten feet (10') between a camping unit and any campground street common parking area, or other common use areas.
4. For mass gatherings, at least twenty (20) square feet per person shall be provided at the site for day time assemblage, and at least forty (40) square feet per person shall be provided for overnight assemblage, exclusive of parking.
5. Campground comfort stations shall provide for each twenty (20) campsites or fraction thereof: one (1) water closet and one (1) urinal for males; two (2) water closets for females; one lavatory for each sex; one (1) bathtub or shower for each sex. A maximum of forty (40) sites may be serviced per building.
6. Campgrounds shall be a minimum of five (5) acres in size.

Section: 1102. Streets and Parking

1. The entrance street to the check in location shall be designed as a Class L2 street.
2. Interior roads shall be designed as a Class L1-Gravel.
3. Each site shall be provided with a gravel off-street parking space.
4. Recreational vehicle spaces shall have a minimum of an eight foot (8') by thirty foot (30') pad. Pull through sites to be graveled eight foot (8') in width across the entire site.
5. Nothing contained herein would preclude the owner from paving the streets or sites if they so desire.

Section: 1103. Water and Sewer

1. An approved, adequate, easily accessible, potable water supply shall be provided.

2. Water and sewer facilities shall be connected to a water and sewer system approved by the Berkeley County Public Water Service District, Berkeley County Public Sewer Service District, Berkeley County Health Department, or the Department of Health, Environmental Engineering Division.

Section: 1104. Utilities

All telephone, cable, electrical and other distribution lines shall be installed in underground conduits, water, sewer, and drainage structures shall be constructed prior to completing the streets.

Section: 1105. Buffer-strips, Screening and Landscaping

1. Removal of existing trees shall be kept to a minimum.
2. Screening will be provided within a twenty-five foot (25') buffer area along the entire perimeter of the campground, unless all facilities are greater than one hundred feet (100') from the lot line.
3. Screening shall be a wall or fence six feet (6') in height with a hedge or a hedge six feet (6') in height and trees fifteen feet (15') on centers.
4. Structures shall not be located within fifty feet (50') of a lot line.

Section: 1106. Solid Waste Disposal

Outdoor collection stations shall be provided for garbage and trash removal. Collection stations shall be located to avoid being offensive and shall be screened from view and landscaped.

Section: 1107. Open Space

A minimum of twenty-five percent (25%) of the site shall be maintained as open space.

ARTICLE 12 - ADMINISTRATION AND AMENDMENTS

Section 1201. Administration

Section 1201. Administration of Regulations

A. These land development regulations shall be administered by the Berkeley County Planning Commission. Only complete submittal packages to include all applications, fees, maps, proof of submission or approvals from participating State and local agencies of government and documents relative to land development unit approval shall be submitted to the Berkeley County Planning Commission. Delivery of such complete submittal documents to the Planning Commission or its representatives at the Planning Department shall constitute submission to the Planning Commission. Official submission dates and other administrative procedures are detailed in Article 3, Processing Procedures.

B. The Planning Commission may, if necessary, seek the advice of professionals or State agencies regarding proposals for land development.

C. The Planning Staff, or other designee of the Planning Commission, shall be responsible for the daily administration of these regulations.

D. In order to effect a timely and orderly processing and review of any plat or plan of a land development unit, prior to advancement of a preliminary and/or approval of a final plat or plan, the Planning Commission Staff and representatives of other agencies shall review the project and make recommendations regarding approval to the Planning Commission.

E. No approval of a plat or plan of any land development unit subject to the provisions of this Ordinance shall be official unless authorized by a majority of all of the members present of the Berkeley County Planning Commission at a regular or properly called special meeting.

Section 1202. Application Fees

The Planning Commission shall establish a uniform schedule of fees, (Appendix F), the revenues from which shall be proportionate to the day-to-day and other costs of operating the Planning Department, and providing the requisite review services. The schedule of fees shall be approved by the Berkeley County Commission before it becomes effective. The Applicant shall pay the specified

fee at the time of filing the application.

Section 1203. Waivers

All waiver requests for any plan shall be required to be advertised and a public hearing shall be held for their consideration.

All waiver requests will be reviewed by County Planning Commission Staff and, if applicable, by the County Engineer, both of whom will make a recommendation of approval/disapproval to the Planning Commission.

A. The Planning Commission may waive the requirements of the Ordinance upon receipt of a written request from the Developer stating the request being made and reason for the request.

   The Planning Commission may grant a waiver only if it specifically finds that:

   1. The conditions requiring the waiver are not the result of any self directed or deliberate physical action taken by the applicant which, had it not been taken, would have alleviated the need for the waiver request;

   2. The waiver will not be contrary to, the public interest, health, safety and welfare given the evidence that is presented.

   3. Consistency and fairness in applying the Ordinance shall not be jeopardized or compromised.

B. Notwithstanding the above, the Planning Commission may grant a waiver when, in its opinion, the Developer has presented evidence that the waiver request represents an innovative and beneficial approach to development which is in the best interest of Berkeley County.

C. Any requests to vary technical requirements shall be forwarded to the County Engineer for review and recommendation. The County Engineer's written recommendation must be received prior to the public hearing, and shall be considered by the Planning Commission, along with evidence presented by the Developer and recommendations from Planning Staff. If, after a public hearing on the requested waiver, the Planning Commission can make the above findings, then it may grant the waiver. All findings, including justification for granting the waiver, must be recorded in the Planning Commission meeting minutes.

D. The applicant must submit an explanation and justification for the waiver request in writing to the Planning Commission on forms provided by the Planning Commission Staff. Waiver requests must be advertised in accordance with Chapter 8A, Article 5, Section 8(c), West Virginia Code, 2004, as amended and a public hearing held prior to consideration by the Planning Commission.

Section 1204. Conditional Waivers

In granting waivers, the Planning Commission may require such conditions as will, in its judgment, substantially secure the objectives of the standards or requirements so waived.

Section 1205. Request for Reconsideration

If the Planning Commission denies the formal application, the Planning Commission shall notify the applicant in writing of the reasons for the denial. The applicant may request, one time, a reconsideration of the decision of the Planning Commission. The Request for Reconsideration must be submitted in writing and received by the Planning Commission no later than ten (10) days after the applicant has received in writing the reasons for denial therefore.

Section 1206. Appeal

A decision of the Planning Commission may be reviewed by certiorari procedure. A petition for certiorari shall specify the grounds upon which it is alleged that the Commission's action is illegal. Such petition must be filed in the Circuit Court of Berkeley County within thirty (30) days after the date of such decision.

Section 1207. Planning Commission Records

The Planning Commission shall keep a record of its findings, decisions and recommendations, relative to all plats or plans for land development units filed with it for review or approval.

All records of the Planning Commission shall be public records, with the exception of any correspondence or documents which are issued or exchanged between the Planning Commission and the Planning Commission's legal counsel in association with any ongoing litigation to which the Planning Commission is a party. Said documents are to be treated as "personal and confidential", and are subject to the legal standards which govern the attorney/client relationship.

Section 1208. Remedies and Jurisdiction

Section 1208.1 Enforcement

The planning commission, governing body, or authorized employee may enforce the provisions of this ordinance in a manner provided for in this article and by applicable law, including but not limited to WV Code 8A-6-3, et seq. **(Added January 10, 2013)**

Section 1208.2 Procedure

1) Upon learning of a potential violation of this ordinance, the staff shall investigate and determine whether a violation has occurred.

2) When it appears after the investigation that a violation of this ordinance has occurred, the staff shall notify the violator by means of a written violation notice. The violation notice shall specify the nature of the violation request that the violation cease within fifteen (15) days from the date of the notice. **(Added January 10, 2013)**

Section 1208.3. Preventive Remedies

1. In addition to other remedies, the County may institute and maintain appropriate actions by law or in equity to restrain, correct or abate violations, to prevent unlawful construction, to recover damages and to prevent illegal occupancy of a building, structure or premises. The description by metes and bounds in the instrument of transfer or other documents used in the process of selling or transferring shall not exempt the seller or transferor from such penalties or from the remedies herein provided.

2. The County may refuse to issue any permit or grant any approval necessary to further improve or develop any real property which has been developed or which has resulted from a subdivision of real property in violation of this Ordinance. This authority to deny such a permit or approval shall apply to any of the following applicants:

   a. The owner of record at the time of such violation.

   b. The vendee or lessee of the owner of record at the time of such violation without regard as to whether such vendee or lessee had actual or constructive knowledge of the violation.

   c. The current owner of record who acquired the property subsequent to the time of violation without regard as to whether such current owner had actual or constructive knowledge of the violation.

d. The vendee or lessee of the current owner of record who acquired the property subsequent to the time of violation without regard as to whether such vendee or lessee had actual or constructive knowledge of the violation.

3. As an additional condition for issuance of a permit or the granting of an approval to any such owner, current owner, vendee or lessee for the development of any such real property, the County may require compliance with the conditions that would have been applicable to the property at the time the applicant acquired an interest in such real property. **(Amended January 10, 2013)**

Section 1208.4 Enforcement Remedies

1. Any person, partnership, or corporation who or which has violated the provisions of this Ordinance shall, upon being found liable therefore in a civil enforcement proceeding commenced by the County, pay a judgment of not more than five hundred dollars ($500.00) plus all court costs, including reasonable attorney fees incurred by the County as a result thereof. No judgment shall commence or be imposed, levied or payable until the date of the determination of a violation by the Magistrate. If the defendant neither pays nor timely appeals the judgment, the County may enforce the judgment pursuant to the applicable rules of civil procedure. Each day that a violation continues shall constitute a separate violation.

2. The circuit court, upon petition, may grant an order of stay, upon cause shown, tolling the per diem judgment pending a final adjudication of the violation and judgment.

3. Nothing contained in this Section shall be construed or interpreted to grant to any person or entity other than the County the right to commence any action for enforcement pursuant to this Section. **(Amended January 10, 2013)**

Section 1209. Amendments

The regulations set forth in this Ordinance may from time to time be amended, supplemented, changed, or repealed, provided that no such action may be taken until after a public hearing is held in relation thereto, at which interested parties and citizens shall have an opportunity to be heard. At least thirty (30) calendar days' notice of the time and place of such hearing shall be published in a newspaper of general circulation in the County.

Any proposed amendment shall be submitted to the Planning Commission for report and recommendation prior to any action thereon by the County Commission.

Appendix A

APPENDIX A

THE MANUAL OF STREET STANDARDS

BERKELEY COUNTY, WEST VIRGINIA

Section 1.1 Purpose

Any individual, developer, corporation or entity desiring to construct a road, street or parking area within a Subdivision or Land Development within Berkeley County, West Virginia shall follow the procedures described herein. Design and construction shall also be as specified herein.

Section 1.2 Procedure

The applicant shall adhere to the following procedure in order for the project to progress in an orderly manner:

a. Submit to the County Planning Commission the appropriate number of sets of plans. Included in the plans shall be roadway plan and profile sheets with scale 1"=50' horizontal and 1"=5' vertical. Plan and profiles shall be augmented by complete alignment information, accurate dimensions locating roadway, highway and drainage structures, ditches and other incidental construction. Finished grade elevations shall be shown every 50' on the profiles as well as stations and elevations for PVC, PVI and PVT. For proposed streets adjacent to developed properties, or lands owned by someone other than the developer, cross sections shall be submitted showing stations every 50' along the developed portions of the proposed roadway. The location of all Bench Marks used and the elevations for some shall be noted on the plans. Drainage pipes and ditches shall be shown on the plan and on the cross sections. Engineering design computations and drainage area maps shall accompany submission to justify the sizes of drainage structures, pipes, ditches, etc. Acceptable storm drainage design criteria shall conform to the Berkeley County Stormwater Management and Sediment and Erosion Control Ordinance. All pipes shall have a minimum of one (1) foot of cover over pipes.

b. Prior to actual construction operations, the developer's contractor shall review the project and proposed schedule with a representative of the County Engineer/Planning Commission for the purpose of scheduling periodic inspections by the County.

c. All bonding shall be in accordance with Article 6 of the basic Ordinance.

d. The developer's attention is also directed to Berkeley County Stormwater Management and Sediment and Erosion Control Ordinance for other information and references on required improvements.

Section 1.3 Specifications

Specifications for road improvements shall be those of the West Virginia Department of

Highways contained in "Geometric Design Criteria for Rural Highways" and "Standard Specifications Roads and Bridges" adopted 1993 and as may be amended from time to time unless specified differently herein.

Section 1.4 Geometric & Pavement Design

Geometric and pavement design shall be in accordance with the plates included herein. Items not covered in the plates shall be in accordance with State Department of Highway Standards or ASSHTO as may be appropriate.

Section 1.5 Intersection Design

a. Sight distances at Intersections

Sight distances at Intersections should be regulated to allow approaching drivers sufficient time to stop. Each vehicle should be visible to the other driver when each vehicle is located on the street centerline and at a specified distance from the point of intersection of the street centerlines. Clear sight triangles should be provided at all intersections and no building, structure, grade, or planting higher than two and one-half (2 ½') feet above the centerline of the street should be permitted within such sight triangles. For intersections of streets having an ADT of 200 or less, or having 20 mile-per-hour speed limit the clear sight triangle requirement may be waived.

1. Clear sight triangles of fifty (50') feet measured along street centerlines from their points of junction should be provided at all intersections of lanes and places. This may be waived as noted above.

2. Clear sight triangles of seventy-five (75') feet measured along street centerlines from their points of junction should be provided at all intersections.

3. For intersections of industrial or commercial with state highways, a greater sight distance is desirable.

b. Horizontal Alignment at Intersections

The preferred angle of intersection for intersecting streets is 90 degrees.

1. The minimum angle is 60 degrees. Any change in street alignment to meet this requirement should occur at one hundred (100') feet from the intersection.

2. Multiple intersections involving junctions of more than two (2) streets

should be avoided.

3. Two (2) streets intersecting the same street from opposite sides should intersect this same street directly opposite one another or with a minimum offset of one-hundred fifty (150') feet between their centerlines.

Section 1.6 Sidewalks

When possible, steps in sidewalks and paths shall be avoided. When steps are necessary, the minimum number of risers shall be two (2) in adjacent series or at least two (2) single risers may be used in a ramp series with the maximum distance between risers being six (6') feet. Risers shall not exceed six (6") inches. All risers and treads shall be uniform in a single flight. All risers in a single sidewalk or path shall be uniform in-height. Tread width shall be at least eleven (11") inches or twelve (12") inches when step flights have a total rise of more than thirty (30") inches. Tread pitch shall be 1/8-inch per foot for drainage.

Sidewalks and paths may be paved with asphalt or Portland cement concrete. Other suitable materials for surfaces may be used as appropriate for local conditions or aesthetics. Procedures for asphalt concrete mixing, proportioning and placement shall be designed by a registered engineer having experience in asphalt concrete construction acceptable to the Planning Commission.

Portland cement concrete sidewalk or path paving shall have expansion joints at all intersections with other paths or sidewalks and structures and at the bottom and top of flights of steps with three (3) or more risers. Portland cement concrete sidewalk or path surfaces shall be brushed or broomed. Procedures for mixing, proportioning and placing Portland cement sidewalks or paths shall be designed by a registered engineer having experience in Portland cement concrete construction acceptable to the Planning Commission.

Concrete sidewalks shall be at least four (4") inches thick except under driveways when at least six (6") inches must be used.

Section 1.7 Cul-de-sac Requirements

a. For all housing developments which contain an interior roadway in excess of one thousand (1,000') feet in length at least one cul-de-sac shall be provided with a paved diameter of one hundred fifty (150') foot diameter right-of-way to accommodate emergency vehicle and school bus turning movements. Additional larger cul-de-sacs may be required dependent upon the proposed design.

b. Dead-end streets are prohibited except as stubs to permit future extensions to adjoining tracts or where they are designed as cul-de-sacs. Temporary cul-de-sacs, upon approval of the County Engineer, may be constructed without asphalt base or wearing course. The developer may be exempt from providing curbing at

the terminus of temporary cul-de-sacs, unless curbs are required for drainage control. A temporary cul-de-sac shall be removed by the applicant and replaced with the permanent street upon extension of the existing street.

Section 1.8 Off -Street Parking

a. Off-street parking facilities may be parking lots, parking bays, or other suitable types. (See figure A-1 for typical design standards)

b. All parking lots and parking bays permitting parking, other than parallel, shall be physically separated from the street and confined by curbing or other suitable separating device, unless other suitable design is approved in accordance with Article 7.

c. Entrances and exits to and from off-street parking areas shall be located so as not to interfere with street traffic.

d. Every off-street parking area shall include sufficient reservoir space to accommodate entering and exiting vehicles without overflowing out into adjacent streets.

e. Parking areas shall be designed so that each motor vehicle may proceed to and from the parking space provided for it without requiring the moving of any other motor vehicle.

f. All dead-end parking areas shall be designed to provide sufficient back-up area for the end stalls of the parking area and to allow turn-around of cars without having to back out of parking areas.

g. The layout of every parking area shall be such as to permit safe and efficient internal circulation, in accordance with accepted traffic engineering principles and standards.

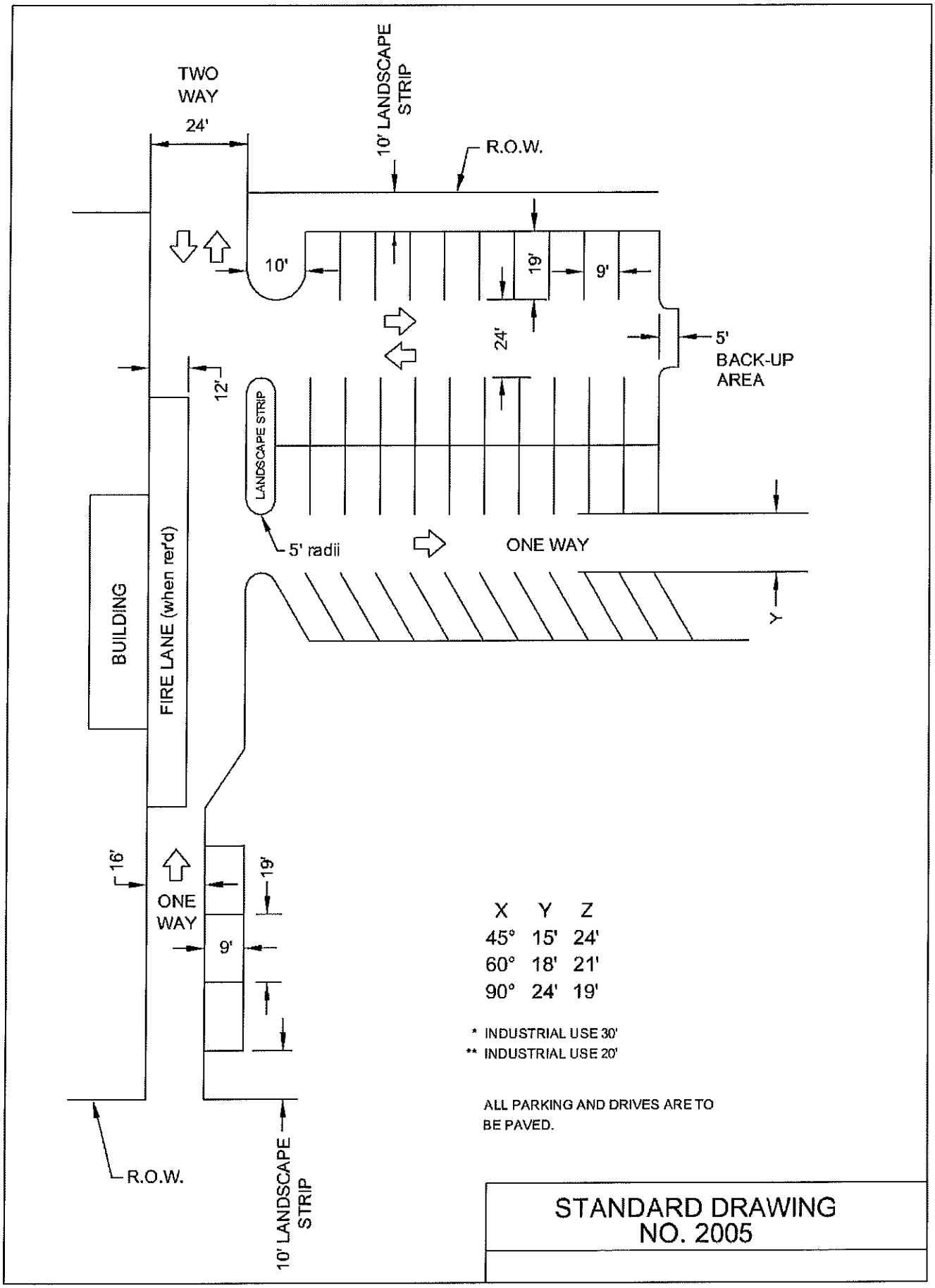
TWO WAY
24'
10' LANDSCAPE STRIP
R.O.W.
10'
19'
9'
24'
5'
BACK-UP AREA
12'
LANDSCAPE STRIP
5' radii
ONE WAY
Y
BUILDING
FIRE LANE (when req'd)
16'
ONE WAY
19'
9'
X Y Z
45° 15' 24'
60° 18' 21'
90° 24' 19'
* INDUSTRIAL USE 30'
** INDUSTRIAL USE 20'
ALL PARKING AND DRIVES ARE TO BE PAVED.
R.O.W.
10' LANDSCAPE STRIP
STANDARD DRAWING
NO. 2005

Figure A-1

Section 1.9 Street and Other Outside Lighting

a. Street lights, like sidewalks, are accepted as integral parts of city streets but few are considered necessary in rural and suburban developments. In areas where there are concentrations of pedestrians and/or vehicles, fixed source lighting tends to reduce accidents.

b. Areas of potential need of lighting for the safety of pedestrians and motorists are schools, churches, recreation or other community centers, apartment and townhouse developments and parking areas where lighting may be needed for the safety of pedestrians would be interior sidewalks and paths.

c. Whenever street or other outside lighting is required, the minimum lighting intensity shall be in accordance with the American National Standard Practice for Roadway Lighting. Illuminating Engineering Society, Approved July 11, 1972, American National Standards Institute and amendments thereto.

Section 1.10 Street Classification and Design

a. Classification-HIGHWAYS

1. Arterial. This classification includes highways which are major traffic corridors or provide for regional traffic of substantial volumes where the average trip lengths are usually five miles or greater. Generally, these highways should accommodate operating speeds of 35 to 55 miles per hour,, and have an estimated average daily traffic (ADT) count of 5,000 vehicles or greater after being fully developed.

2. Collector. This classification is intended to include those highways which connect local access highways to arterial highways. They may serve as traffic corridors connecting residential areas with industrial, shopping and other service. They may penetrate residential areas. Generally, these highways will accommodate operating speeds of 35 miles per hour, and have an estimated average daily traffic (ADT) count of 1,750 to 5,000 vehicles after being fully developed.

b. Classification-LOCAL-Subdivision Street

1. Local. This classification is intended to include streets and roads that provide direct access to abutting land and connections to higher classes of roadways. Traffic volumes will be low and travel distances generally short.

a. L1-Rural Lane-Gravel. Lots over 5 acres in size.

b. L2-Local Road- Serving a maximum of 60 lots.

c. L3-Local Road- Serving a maximum of 250 Lots.

d. Alley- Serving off street parking or rear of residential lots

c. Classification-Heavy Duty

1. Heavy-Duty. This classification is intended to provide access to industrial areas and other areas where semi-trailer truck traffic is expected.

TABLE A

1. Minimum component widths for each type of street shall be as follows:

A. Highway Widths-

Type of Street	Right-of-Way	Cartway Width
Arterial	60'-120'	26' or 40'
Collector	60'	24' or 34'

B. Local Widths-

Type of Street	Right-of-Way	Cartway Width
L1-Gravel	50'	18'
L2	50'	20'
L3	60'	22'
Alley	20'	12'

C. Heavy Duty Width-

Type of Street	Right-of-Way	Cartway Width
Heavy Duty	60'	24'

GEOMETRIC DESIGN CRITERIA
STREETS AND HIGHWAYS

Item	Streets			
	L1-Alley	L2	L3	Heavy-Duty
Design Speed	25	35	35	N/A
Minimum Turning Lane Width	---	12'	12'	12'
Minimum Horizontal Curvature Radius	100'	150'	300'	500'
Minimum Turning Flare Radius at connections	30'	30'	35'	50'
Stopping Sight Distance	100'	175'	235'	275'
Minimum Roadway Grade	0.5%	0.5%	0.5%	0.5%
Maximum Roadway Grade	15%	12%	10%	8%
Intersection Approach Grade	8%	6%	6%	6%
Roadway Pavement Cross Slope	3/8"/ft.	3/8"/ft.	3/8"/ft.	3/8"/ft.
Maximum Super elevation	---	---	0.04'/ft.	0.04'/ft.

Minimum Super elevation Run out	---	---	175'	200'
Minimum Right-of-Way at Cul-De-Sac (Radius)	70'	70'	70'	N/A

HEAVY DUTY & L3 – PAVEMENT

Full depth Asphalt

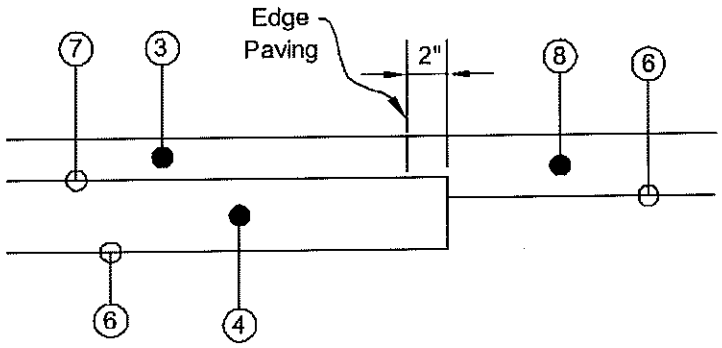

3 2"|Bituminous Concrete Surface Course
4 6" Bituminous Concrete Base Course
6 Prepared Subgrade
7 Tack Coat
8 Shoulder: 6" Dirty Crusher Run

Stone Base

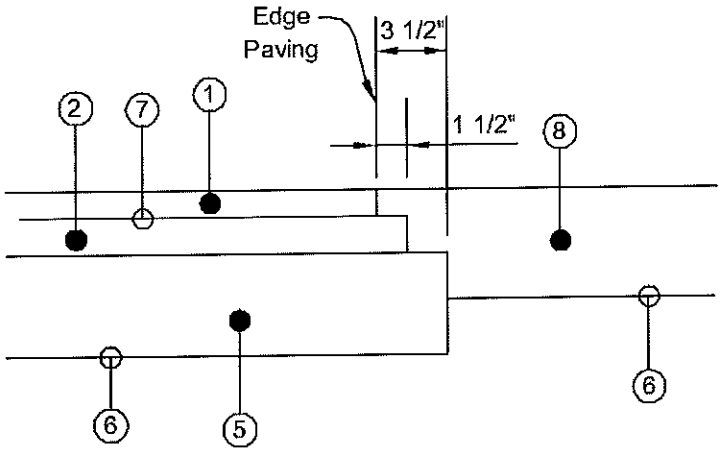

1 1 1/2" Bituminous Concrete Surface Course
2 3" Bituminous Concrete Binder Course
5 7" Crusher Run Base (2 Courses)
6 Prepared Subgrade
7 Tack Coat
8 Shoulder: 6" Dirty Crusher Run

PLATE NO. 1

L2 & ALLEYS

Full depth Asphalt

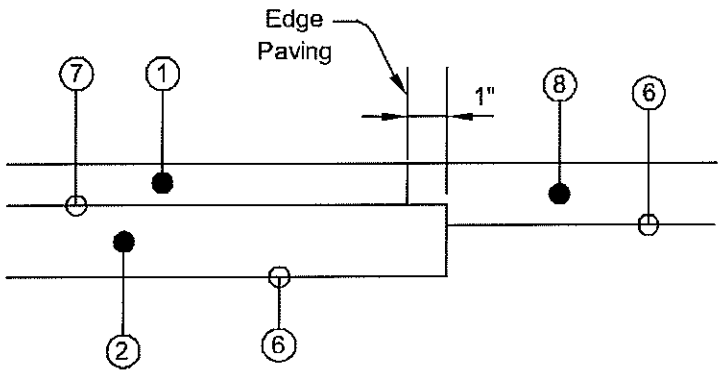

1. 1 1/2" Bituminous Concrete Surface Course
2. 4" Bituminous Concrete Base Course
6. Prepared Subgrade
7. Tack Coat
8. Shoulder: 6" Dirty Crusher Run

Stone Base

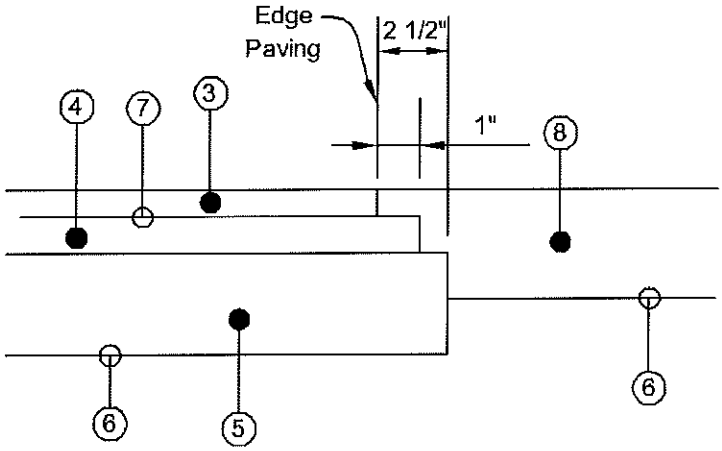

3. 1" Bituminous Concrete Surface Course
4. 2" Bituminous Concrete Binder Course
5. 6" Crusher Run Base (2-3" Courses)
6. Prepared Subgrade
7. Tack Coat
8. Shoulder: 6" Dirty Crusher Run Stone

PLATE NO. 2

L - 1 (GRAVEL)

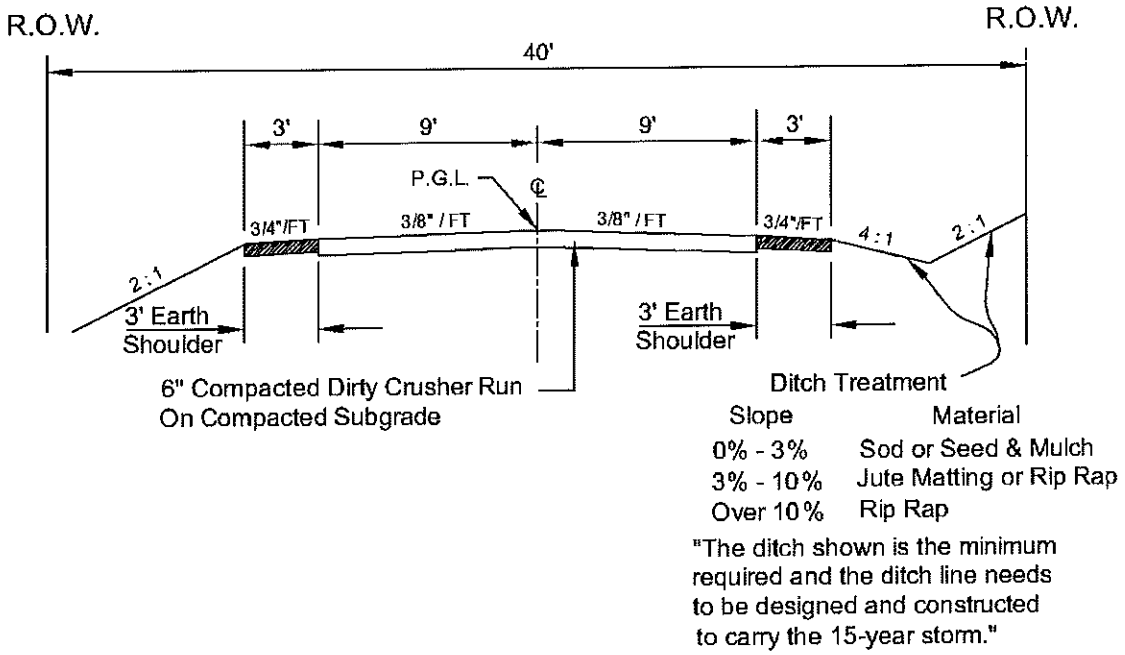

PLATE NO. 3

Street Details

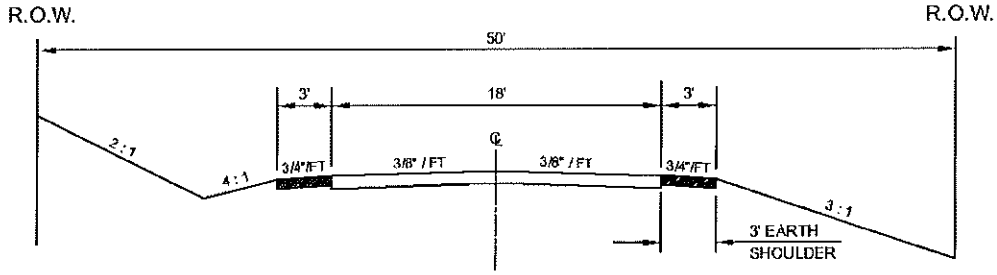

L - 1

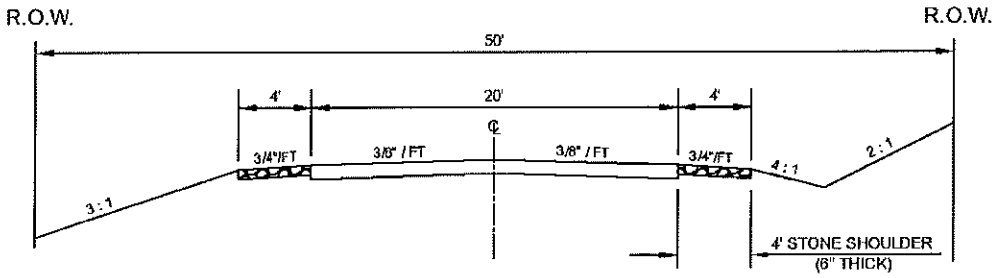

L - 2

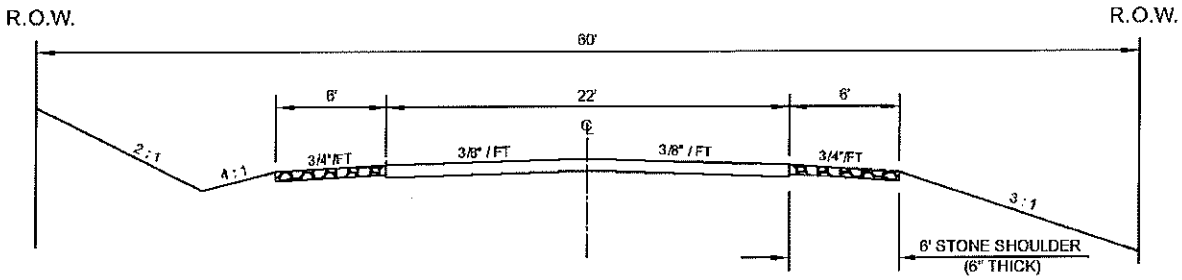

L - 3

PLATE NO. 4

Street Details

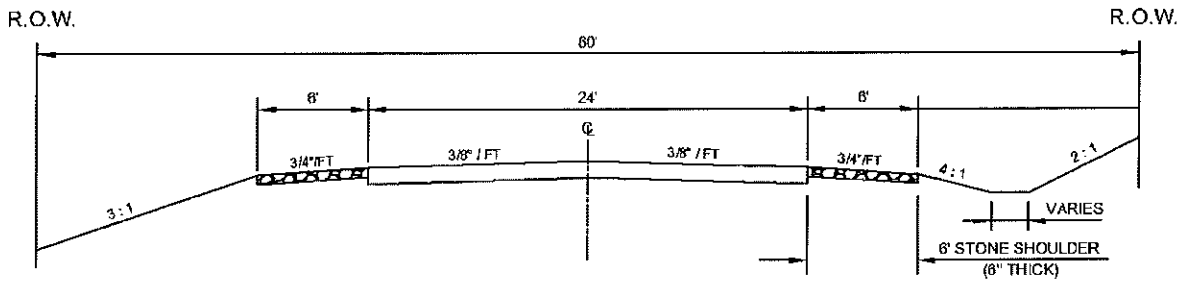

COLLECTOR / HEAVY DUTY

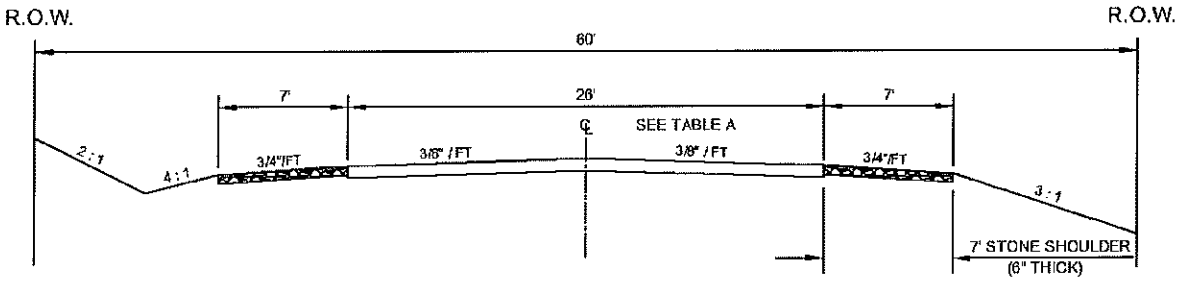

ARTERIAL

PLATE NO. 5

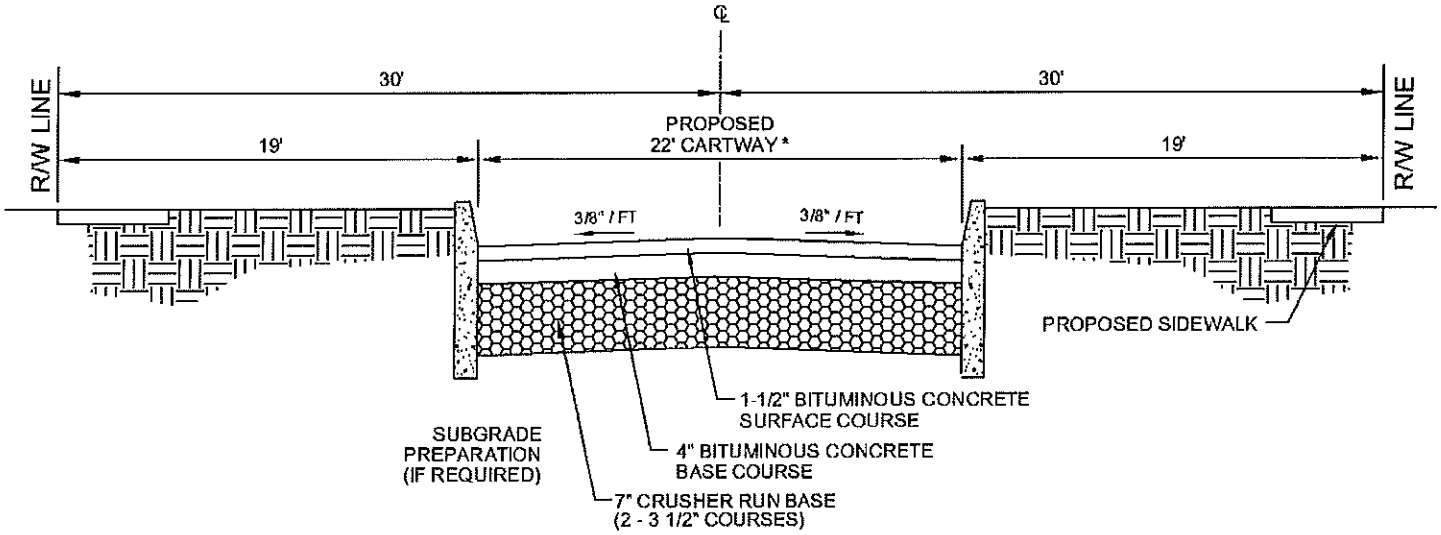

L - 3 CROSS SECTION

* ADD 8' WIDTH PER LANE IF USED

PLATE NO. 6

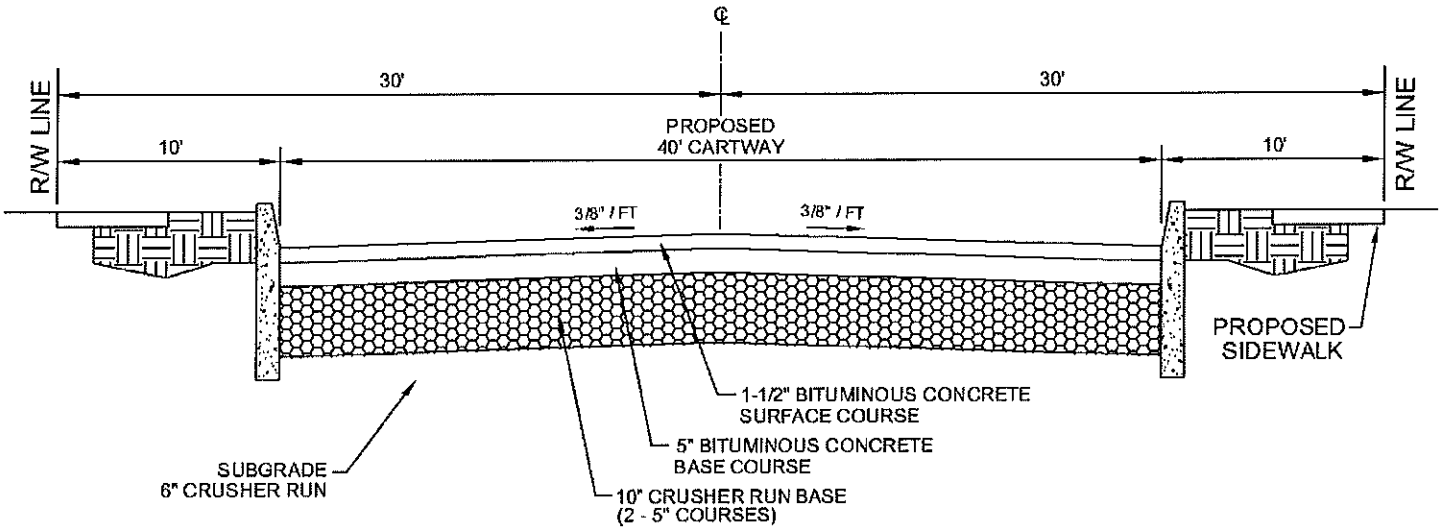

HIGHWAY ARTERIAL

PLATE NO. 7

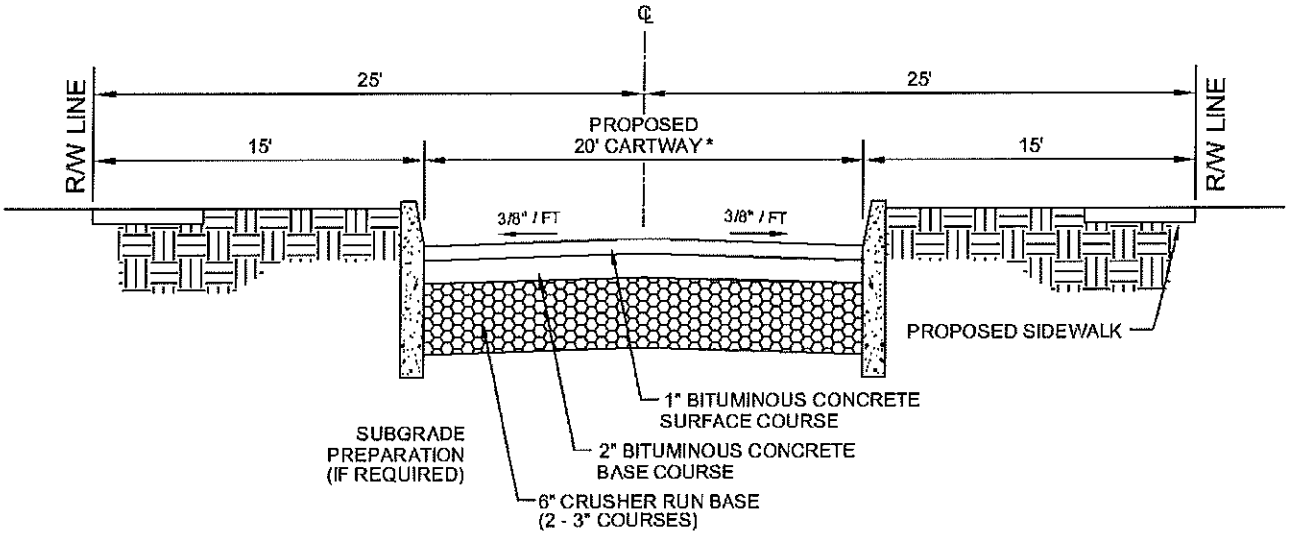

L2 CROSS SECTION

PLATE 8

* ADD 8' WIDTH PER PARKING LANE IS USED

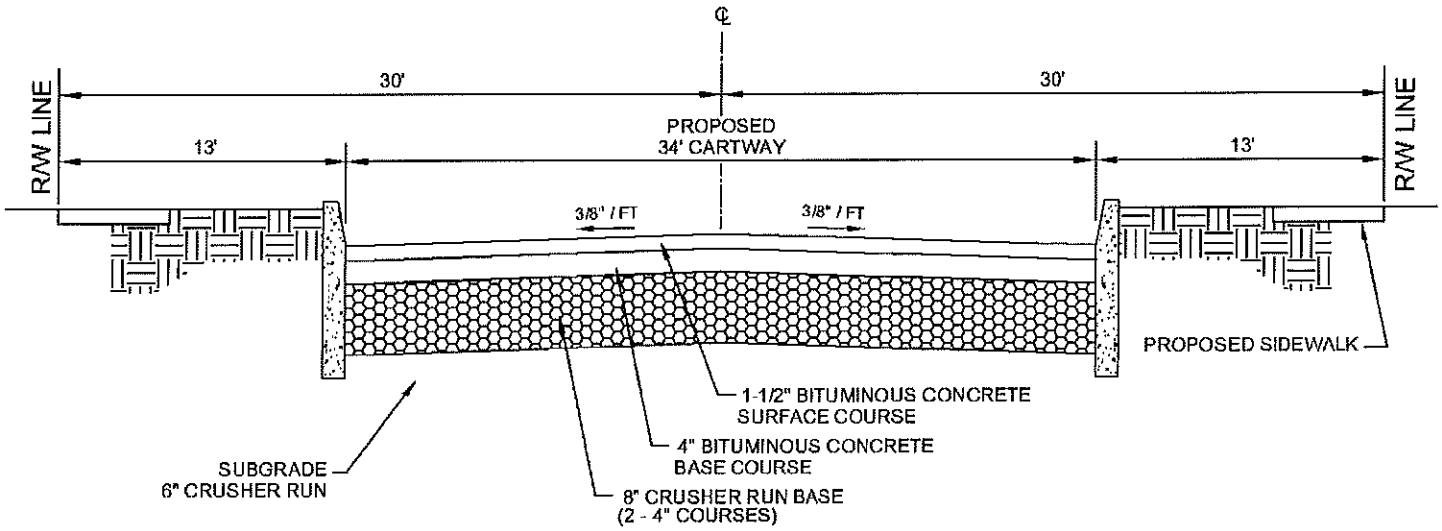

HIGHWAY COLLECTOR / HEAVY DUTY

PLATE 9

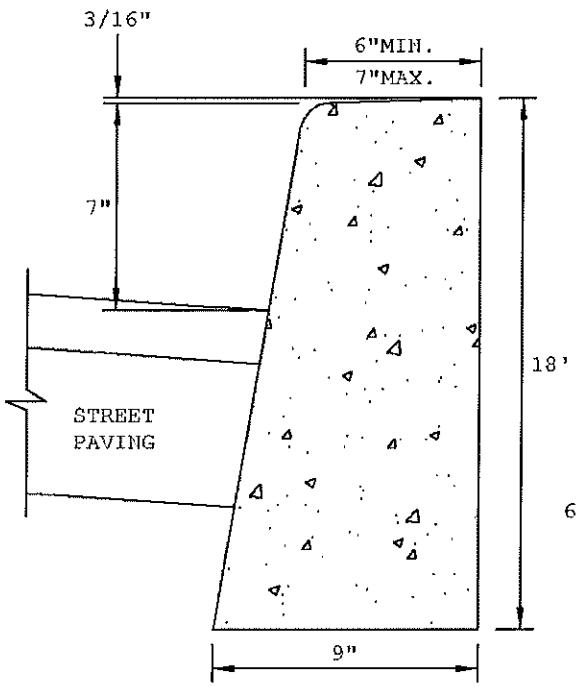

CONCRETE CURB

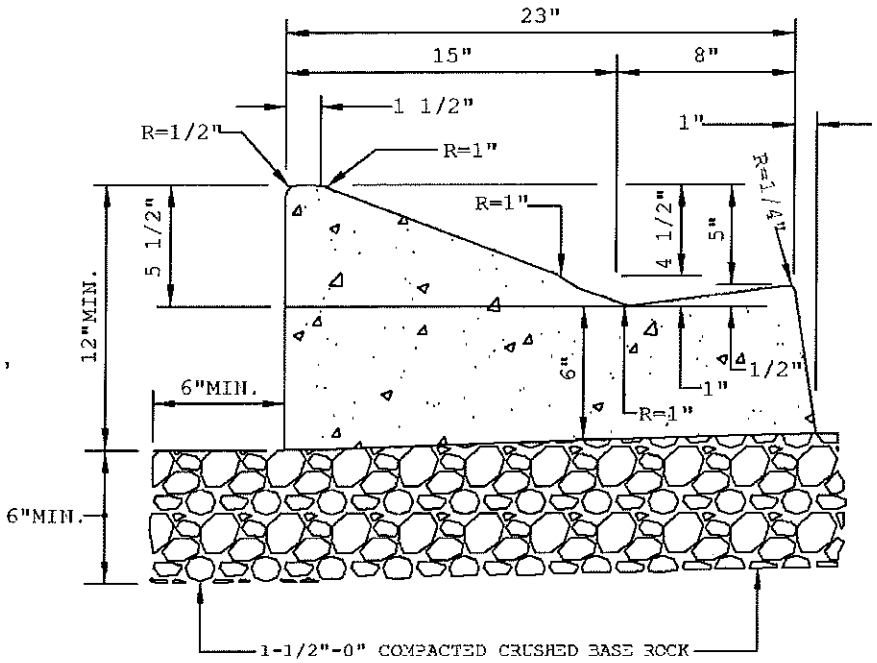

MOUNTABLE CURB
DETAIL

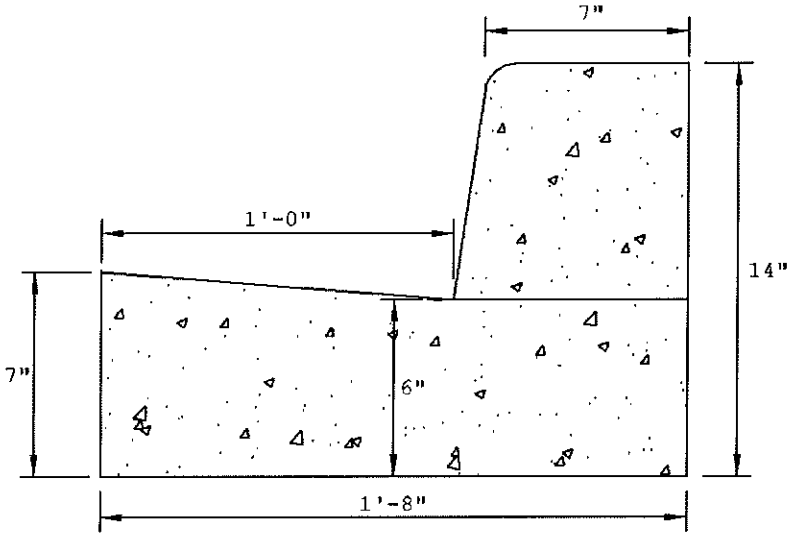

CONCRETE
CURB & GUTTER

CURB STANDARD AND DETAILS

PLATE NO.10

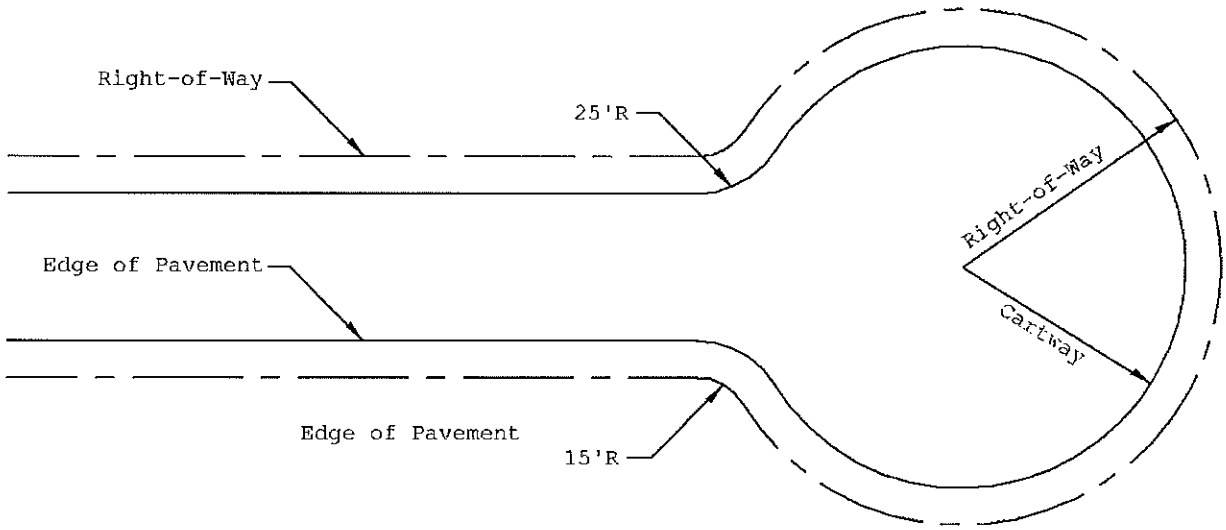

Street Classification	Right of Way	Cartway
Local	70'	60'
Heavy Duty	85'	75'
School Bus	90'	75'

CUL-DE-SAC DETAIL

PLATE NO.11

TEMPORARY AND/OR EMERGENCY VEHICLE TEE TURN-AROUND

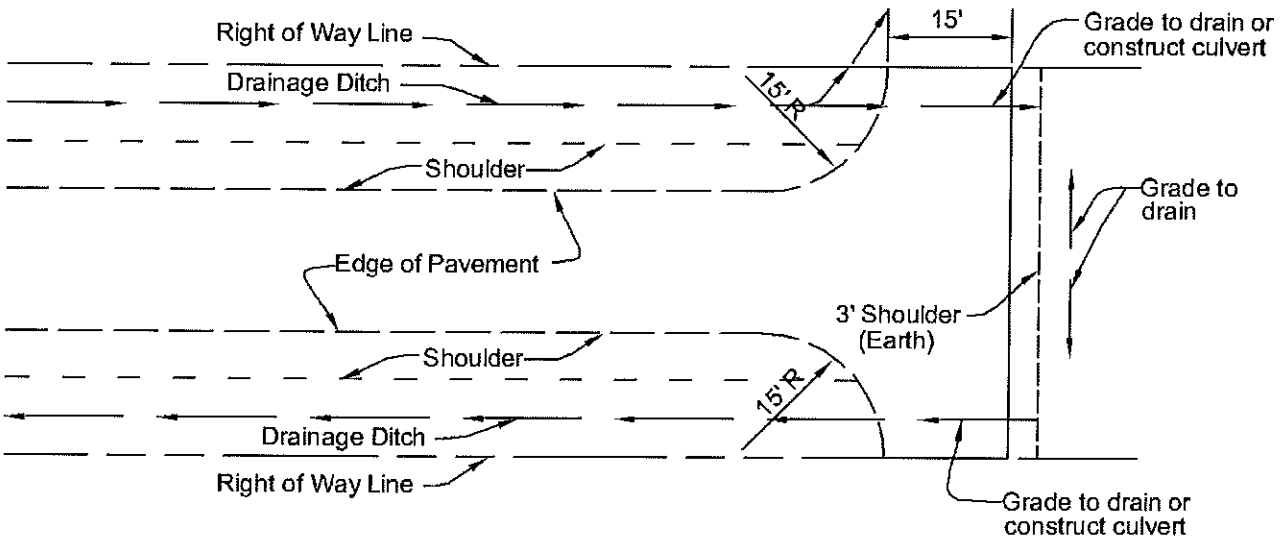

PLATE NO. 12

Appendix B

Appendix B

DEVELOPERS AGREEMENT

MADE this _____ day of _____, 20__ by and between _____ (hereinafter "Developer")

A
N
D

Planning Commission of Berkeley County, West Virginia (hereinafter "the County or the County Planning Commission").

WHEREAS, Developer is the owner of a certain parcel of land situate within the County, said parcel of land being more particularly described in Exhibit "A" attached hereto; and

WHEREAS, Developer is desirous of developing said lands under a Land Development Plan captioned _____ and dated _____, 20___, (hereafter "Plan"), as the same was approved by the Berkeley County Planning Commission on _____, copies of which plan are marked Exhibit "B" and attached hereto; and

WHEREAS, in the application to the County for approval of the Plan the Developer indicated his intention to construct at his sole cost and expense (including but not limited to engineering inspection and review expenses incurred by the County in connection with the Plan) all those improvements required by the Plan or by any conditions attached thereto, more particularly described in Exhibit "C" attached hereto; and

WHEREAS, Developer has agreed to deliver to the County a bond, renewable Irrevocable Letter of Credit or other form of surety (in form and substance to be approved by the County Planning Commission) from an institution licensed to do business in West Virginia in the amount of $_____ to guarantee the installation of the improvements and reimbursement of the County for expenditures that may be directly incurred in connection with the completion of the improvements should the Developer default.

NOW, THEREFORE, IT IS AGREED:

1. Developer covenants, promises and agrees to build, construct and install all improvements in accordance with the specifications of the County and in the manner provided and approved by the County, on or before the _____ day of _____, 20__.

2. Developer shall enter into contract(s) with such person or persons necessary to construct the improvements. Developer shall provide the County with a construction schedule for all required public improvements which satisfies the completion date agreed upon in Paragraph 1 immediately above, a schedule of job site meetings, and the name and address of the supervisory point of contact for the contractor. The Developer agrees that the construction or installation of the improvements is subject to the inspection and approval of the County Engineer.

3. Developer concurrently delivers to the County its surety, in the amount of $_____. The amount of financial security required shall be in the amount of 115% of an estimate of the cost of completion of the required improvements, based upon the prevailing wage rates, submitted by the Developer and prepared by a Professional Engineer licensed as such in the state of West Virginia and certified by such Engineer to be a fair and reasonable estimate of such cost. The County Planning Commission, upon the recommendation of the County Engineer, may refuse to accept such estimate for good cause shown. Exhibit C of this Agreement may be used for the purpose of documenting the needed surety or any other form prescribed by the County Engineer.

   The bond, Letter of Credit or other surety shall be posted as security for performance of this agreement, including the construction of the improvements as shown on the approved Final Plan. The term of such surety shall be for the period agreed upon for the completion of construction of the improvements and, if required by the County Planning Commission, will include an "evergreen" clause which will allow for an automatic extension of term to cover any extended period of construction. The Planning Commission shall have authority on its own initiative and after thirty (30) days notice to the principal, to increase the amount of surety at any time, over and above five percent (5%), if in its judgment and sole discretion, such increase is found to be appropriate. The Planning Commission must justify such decision by a demonstrable increase in costs, which must be disclosed to the principal.

   In the event Developer shall fail to construct the improvements in a manner acceptable to the County or by the time agreed upon in this agreement or amendment thereto, the County shall notify the Developer of said circumstance in writing and, when possible, allow him forty-five (45) days from the date of said notification to correct the deficiencies.

   In the event that the developer fails to correct said deficiencies to the satisfaction of the Planning Commission, the County may, at its option call the bond or other surety and construct said improvements at the Developer's expense. In such case, any bond or other surety balance remaining after construction shall be returned to the surety.

   In the event the funds secured by said surety shall not be sufficient to satisfactorily construct the improvements or reimburse the County for its cost and expense to construct the same, the County may file an appropriate legal action against Developer based upon this agreement for the balance of the funds required to so construct the improvements or reimburse the County for the same.

4. As the work of installing the required improvements proceeds, the party posting the financial security may request that the County release or authorize the release, from time to time of such portions of the financial security necessary for the payment to the contractor or contractors performing the work. Any such request shall be in writing addressed to the County Planning Commission, and the County Planning Commission shall have 60 days from receipt of such

request within which to certify in writing that such portion of the work upon the improvements has been completed in accordance with the approved plat. Upon such certification the County Planning Commission may authorize a reduction in the financial security by the lending institution by an amount as estimated by the Engineering Department/County Planning Commission fairly representing the value of the improvements completed.

5. All construction shall be in accordance with the construction plans, County Ordinances and other applicable regulation. Unless otherwise specified by applicable regulation, if a conflict exists between the plans and ordinances, the stricter of the two will be used. The Developer is responsible, as necessary, to correct any unforeseen conditions that are caused by the installation of these improvements.

6. Developer shall grant and convey, to third parties if appropriate, by Deed of Dedication all easements for rights-of-way (including maintenance) shown on the Preliminary and Final Plans. In the event easements are required from third parties, it shall be the duty of the Developer to obtain them at his sole cost and expense.

7. When the County Engineer's report indicates approval of all required improvements, the bond may be reduced to an amount not less than fifteen percent (15%) of all required improvements, at the inception of the project. Upon completion of the one hundred eighty (180) day period, a performance inspection shall be performed. If all is acceptable, the surety shall be released in full.

9. In addition to the aforesaid requirements, the Developer agrees that he will at his own expense:

   A. Pay to the County any fees required by outside/third party agencies hired by the County and as agents thereof for inspecting construction of public improvements and for fees and other expenses such as, but not limited to, the payment for Engineers, additional applications and approvals, as may be required by the ordinances and regulations of the County or other government entities.

   B. Connect any underground springs or other waters encountered during construction to the proposed storm sewers or to a proper outlet as designated by the County Engineer.

   C. Upon completion of the construction, the Developer shall ensure removal from the site and disposal of all brush, rubbish, refuse and debris, leaving the area free and clear of same.

   D. Remove all temporary buildings or structures within one month after final acceptance of the Improvements by the County.

THIS AGREEMENT shall be binding upon the heirs, executors, administrators, successors and assigns of Developer and the County.

DEVELOPER

_____ _____

ATTEST

BERKELEY COUNTY, WEST VIRGINIA

_____ _____

ATTEST Chairman (or Designee)

Appendix C

APPENDIX C

ENVIRONMENTAL IMPACT CHECKLIST FOR PROJECT REVIEWS

APPLICANT/OWNER: **PROJECT NAME:**

PROJECT LOCATION:

PROJECT DESCRIPTION:

Please attach a sheet describing answers to the questions listed below.

1.	Is the proposed development consistent with the goals and objectives of the Comprehensive Plan and the growth management map?
2.	Is the proposed development consistent with the Subdivision and Land Development Regulations?
3.	What types of uses are proposed for the entire subdivision?
4.	What is the size of the proposed development, including buildings, acreage, and lot coverage (impervious surface) by buildings, roads, driveways, and sidewalks, gross density, lot area, stormwater management and easements?
5.	Is the applicant aware of any impact the development would have on groundwater supply or quantity? Has a draw down test been performed?
6.	Is the applicant aware of any affect the development would have on the quality or supply of water to a lake, pond, stream, or wetland?
7.	What will be the source of water? If on-site water is proposed, is there sufficient water to accommodate the development? Is the applicant aware of any potential ways in which the proposed water source would be contaminated from nearby landfills, commercial or industrial uses? Could the on-site use of water reduce water availability to adjoining properties?
8.	Is the applicant aware of any impact the development would have that could change stormwater drainage patterns or increase runoff from the site?
9.	Is the applicant aware of any impact the development would have that could produce significant soil erosion and sedimentation?
10.	How will sewage be disposed of? If on-site sewage disposal is proposed, are soils appropriate and the lot large enough to provide an adequate absorption field?
11.	How will the development affect transportation use and patterns?
12.	How will solid waste, including any toxic substances, from the development be disposed of?
13.	Is the applicant aware of any known rare or endangered plant or animal species, sensitive wildlife habitat, or hunting and fishing areas that would be impacted by development?
14.	Is the development proposed for an area with known natural hazards, especially floodplains and steep slopes?
15.	Are there any known archaeological or historic sites, historic buildings, or cemeteries?
16.	Are there any known rock outcrops, sinkholes, and caverns, unique or unusual landforms found on the site? (i.e., geological formations, etc.)
17.	What state and federal reviews and permits are needed for approval of the proposed development and have they been applied for or obtained?
18.	Is the applicant aware of any known impaired streams located on the property?
19.	Has the applicant taken into consideration the environmental features on the site in the development of the project? What environmentally significant features have been preserved?

Appendix D

DESIGN STANDARDS FOR SALVAGE YARDS

(Salvage Yard Ordinance)

Approved:
Berkeley County Planning Commission
June 4, 1984

Adopted:
Berkeley County Commission
August 21, 1984

* Note - formerly Article XII of The Berkeley County Subdivision Ordinance
now designated Article XV of said Ordinance.
Enacted March 8, 2005, Berkeley County Commission

ARTICLE XII*: SALVAGE YARD ORDINANCE

Berkeley County, West Virginia

Section 1201. AUTHORITY, PURPOSE, TITLE, EFFECTIVE DATE

Section 1201.1 General Authority

By authority of the Code of West Virginia, Chapter 17, Article 23, Section 4, the Berkeley County Planning Commission is empowered to adopt, administer and enforce reasonable rules and regulations for the establishment, operation or maintenance of a salvage yard.

Section 1201.2 Purpose

The purpose of this ordinance is to establish a permit procedure and set the reasonable rules and regulations for the establishment, operation and maintenance of a salvage yard. More specifically, this ordinance is adopted for the following purposes:

a. To protect and provide for the public health, safety and general welfare of the County.

b. To promote the harmonious development of the County to secure safety from fire, flood and other dangers.

c. To promote an efficient access to the existing transportation network and particularly the highway system.

d. To protect and conserve the value of land through-out the County and the value of buildings and improvements upon the land, and to minimize the conflicts among the uses of land and buildings.

e. To prevent the pollution of air, streams and other water bodies; to assure the adequacy of drainage facilities; to safeguard the water table; and to encourage the wise use and management of the natural and visual resources throughout the County in order to preserve the integrity, stability and natural beauty of the community.

f. To guide future growth and development in accordance with the comprehensive plan and/or any permanent or interim land use and growth management regulation

Section 1201.3 Title

This Ordinance shall be known, cited and referred to as the Berkeley County Salvage Yard Ordinance, and shall be made a part of the County Land Use Regulations.

Section 1201.4 Permit Required

A salvage yard permit issued by the Berkeley County Planning Commission shall be required prior to the establishment of any salvage yard. Any salvage yard which is not licensed in accordance with Article 23, Chapter 17, Section 3 of the Code of West Virginia at the time of adoption of this Ordinance shall require a permit under this Ordinance. In addition, a permit shall be required for the expansion of a salvage yard issued a permit under this Ordinance or a legally licensed salvage yard in existence prior to the adoption of this ordinance. No permit shall be issued until it conforms with all other County Land Development laws and the laws of the State of West Virginia.

Section 1201.5 Exempt Activities

The following activities are expressly exempt from the provisions of this Ordinance:

a. Any new or used motor vehicle dealer licensed by the State of West Virginia or any commercially established licensed motor vehicle repair shop, provided that any junked motor vehicles or salvage on site are being stored for repair, reconstruction, impoundment, temporary storage, or for temporary use of parts and would not otherwise constitute a salvage yard. A commercially established repair shop shall not include part-time or "hobby" repair shops or other establishments which are not the principal occupation of the proprietor.

b. Publicly owned and operated solid waste disposal facilities approved by the West Virginia Department of Natural Resources under Chapter 20, Article 5F and the Legislative Regulations for Solid Waste Management, as amended.

c. Bonifide Agriculture Operations in the Planning Commission's opinion, vehicles or other material serving an acceptable purpose toward production activity of a bonifide agriculture operation; actually files a 1040 schedule F, Federal Income Tax Form.

d. Licensed contractors for the storage of operational equipment or equipment under repair and used in conjunction with their business.

Section 1201.6 Effective Date

This Ordinance, established by action of the Berkeley County Commission on *August 21, 1984*, shall take effect on *same*, and shall apply to all salvage yards as defined in this ordinance within the unincorporated territory of Berkeley County.

Section 1202. **INTERPRETATIONS AND DEFINITIONS**

Section 1202.1 Interpretation

For the purpose of this Ordinance, the following interpretations shall apply:

a. Words used in the present tense include the future tense.

b. The singular includes the plural.

c. The plural includes the singular.

d. The word "person" includes a corporation, unincorporated association or partnership as well as an individual.

e. The term "shall" or "will" is always mandatory.

f. The word "building" or "structure" shall be construed as if followed by the phrase "or part thereof".

g. The word "County" shall refer to Berkeley County.

h. The word "Ordinance" shall refer to the Berkeley County Salvage Yard Ordinance.

Section 1202.2 Definitions

For the purpose of this Ordinance, the following definitions shall apply:

1. Agriculture: The cultivation of plant crops or the raising of livestock. Agriculture is the organized use of land for the production of plant or animal food, fiber or landscape products. Beef and dairy farms, grain farms, orchards, plant nurseries, and tree farms are forms of agriculture. Other forms of agriculture could be considered by the Planning Commission; current tax status as an agriculture operation by filing a 1040 schedule F, Federal Income Tax Form.

2. Building: Any structure which is permanently affixed to the land or a mobile unit.

3. Community Impact Statement (CIS): A report prepared by an applicant or qualified agent describing the scope and feasibility of his proposed salvage yard. The CIS also describes the physical, social and economic impacts a proposal may bring to the County and to the immediate area.

4. Construction Bond: A written instrument with a clause binding an applicant to pay a certain penalty (or a portion thereof) to the County Commission; conditioned, however, with a statement that the payment of the penalty (or a portion thereof) may be avoided upon satisfactory construction and completion of improvements required by the Planning Commission. A Construction Bond is secured by a surety, by cash in escrow, or by other means satisfactory to the Berkeley County Commission and the Berkeley County Planning Commission.

5. County Commission: The Berkeley County Commission elected at-large by magisterial district.

6. County Engineer: A member of the Planning Commission Staff (or a consultant to the Planning Commission) who is registered as a West Virginia Professional Engineer.

7. County Land Use Regulations: The Ordinance adopted by the Berkeley County Commission for the purpose of monitoring and regulating the development of land. This shall include the Subdivision Ordinance, the Improvement Location Permit Ordinance, and any other similar Ordinance officially adopted by the County Commission.

8. Fencing: An enclosure constructed of appropriate materials located and maintained so as to effectively screen the salvage yard from the public view and to effectively provide security against any injury or damage.

9. Land Use Coordinator: a designated employee of the Planning Commission charged with the administration and enforcement of this Ordinance and other land use laws in Berkeley County, unless otherwise designated, this shall mean the Berkeley County Planning Director.

10. Motor Vehicle: Any device in which persons or property may be transported and is, or was, self-propelled.

11. Motor vehicle, Junked: Any motor vehicle which is unlicensed, unregistered, discarded, wrecked, ruined, uninsured, scrapped, or dismantled; cannot pass the State Motor Vehicle inspection; and, is not serving a reasonable functional use or purpose or is not in an enclosed building.

12. Motor Vehicle Repair Shop: Any commercially established building or land used for the servicing, repairing, or equipping of motor vehicles. A motor vehicle repair shop shall include commercial garages and body shops, licensed by the State of West Virginia.

13. Planning Commission: The Berkeley County Planning Commission. A commission appointed by the Berkeley County Commission to promote and administer the Comprehensive Plan and Land Use Ordinances of Berkeley County.

14. Salvage: Scrap copper, brass, rope, rags, batteries, paper, rubber, trash, waste, dismantled or wrecked machinery, machines or motor vehicles or any parts of any junked, dismantled or wrecked machinery, machines or motor vehicles, iron, steel, appliances and other scrap ferrous or non ferrous materials.

15. Salvage Yard: Any place which is maintained, operated or used for the storing, keeping, buying, selling, or processing of salvage, or for the operation and maintenance of a motor vehicle graveyard, and the term shall also include garbage dumps and sanitary landfills. Any collection of three or more junked vehicles, or combination of ferrous or nonferrous materials together with one or more junked motor vehicles amounting to a total of 75 cubic yards or a collection of any salvage amounting to 75 cubic yards shall be considered a salvage yard. For the purpose of this ordinance, 25 cubic yards shall constitute a motor vehicle (i.e. 75 cubic yards of salvage; 50 cubic yards of salvage plus one car; or 25 cubic yards of salvage plus two cars).

    See attachment A for "Method of Measurement to Determine Amount of Salvage"

16. Solid Waste Disposal Facility: Any facility established, modified or operated for the purpose of the disposal of solid waste or its reclamation as defined by West Virginia Department of Natural Resources, Legislative Regulations for Solid Waste Management, as amended.

17. Sketch Plan: An informal drawing of a salvage yard's proposed design and layout which is prepared according to the provisions of this Ordinance and which assists the Planning Commission and the applicant in reviewing the general scope, feasibility and impact of a proposed project.

18. Structure: Anything constructed, preconstructed or prefabricated, the use of which requires fixed location on the ground; or, anything attached to something having such location. A structure does not include fences individual driveways, or retaining walls.

Section 1203. **PERMIT PROCEDURES AND REQUIREMENTS**

Section 1203.1 Permit Procedures

Salvage Yard proposals are reviewed at three stages:

- Application Conference – Staff
- Community Impact Evaluation – Planning Commission
- Final Public Hearing – Planning Commission

Upon request, partial exceptions from the review process may be considered by the Planning Commission for salvage yard proposals which appear to have a minor impact on the County. However, public hearings shall not be waived. The Planning Commission may advance such proposals directly to the Final Public Hearing stage, provided a site inspection by the Staff and Planning Commission Review Committee reveals no apparent difficulty. Although certain requirements for documentation of the proposal may be waived, advancing the application shall not exempt a proposal from other requirements of this ordinance.

a. A permit application shall be made, on forms provided by the Planning Commission, and shall be submitted to the Planning Commission Office. In addition, the applicant shall submit the following information:

    1. Community Impact Statement as required in Section 3.1.

    2. Sketch Plan as required in Section 3.2.

    3. Appropriate certificate of approval (entrance permit) from the West Virginia Department of Highways.

    4. Other permits, licenses or approval required under County, State or Federal Laws or official documentation that application has been made and received for such approvals.

b. Upon submission of a completed application and required information, an APPLILCATION CONFERENCE shall be scheduled between the applicant and the Planning Commission Staff.

c. At the APPLICATION CONFERENCE the applicant and staff review and discuss the materials submitted. The scope of the proposed salvage yard is examined according to the impact it will have on the physical, social, and economic conditions within the County. Modifications to the sketch plan are made if appropriate. The applicant is advised of the date and time his proposal will be brought before the Planning Commission for the Community Impact Evaluation.

d. The Planning Commission places a Legal Notice in a newspaper having general circulation within the affected area no less than 30 days prior to the meeting, advising the public of the Community Impact Evaluation before the Planning Commission. The applicant shall place effective signing provided by the Planning Commission in full view and unobscured on the proposed site that is visible and readable to the general public and within 25 feet of a public road.

e. Community Impact Evaluation is presented to the Planning Commission during a regular meeting. The Planning Commission reviews the sketch plan and Community Impact Statement. The Planning Commission renders a decision whether to approve the concept, deny the application or require additional information before advancing the proposal to the Public Hearing. Examples of other information which may be required are a more detailed Community Impact Statement or a detailed site plan.

f. If the salvage yard application is disapproved, at the Community Impact Statement stage, the applicant is advised in writing of the Planning Commission action and of the specific reasons upon which the action was based.

g. If the application is approved in concept or the applicant submits the information required by the Planning Commission, and is deemed sufficient by the staff to meet the concerns of the Planning Commission, a date shall be set for a public hearing at a regular meeting of the Planning Commission.

h. The Planning Commission shall place a notice of public hearing in a newspaper having general circulation within the affected area no less than 30 days prior to the hearing. The applicant shall post a sign on the proposed site. Said sign shall be in full view and unobscured, it shall also be readable to the general public and within 25 feet of a public road. Said sign will be provided by the Planning Commission.

i. The public hearing is held before the Planning Commission in order to solicit new or revised information from the public not previously considered at the Community Impact Evaluation stage. The Planning Commission, after considering public comment, all previous information and comment, the provisions of this Ordinance, and the provisions of Section 17-23-4 of the Code of West Virginia, may approve, table for further consideration or disapprove the salvage yard proposal.

j. The Planning Commission shall approve, or disapprove a salvage yard proposal within forty-five days from completion of the public hearing. Failure to take action within forty-five days shall result in the approval of the application, unless a waiver of this time period is granted to the Planning Commission by the applicant.

k. If the salvage yard application is disapproved at the Public Hearing stage, the applicant is advised in writing of the Planning Commission action and of the specific reasons upon which action was based.

Section 1203.2 Community Impact Statement

All salvage yard proposals shall be accompanied by a written Community Impact Statement (CIS). The purpose of the CIS is to provide the Planning Commission with much of the information necessary to consider the potential impacts that the salvage yard may have on a specific site, on the surrounding land uses and on the County as a whole. The content shall be sufficient to permit an examination of these impacts.

a. Basic descriptive information about a salvage yard proposal shall include:

    1. Name and address of owner/developer.

    2. Name and address of contact person.

    3. Tract size(s), shape and location, and the area(s) or portion(s) to be used as a salvage yard.

    4. General description of the nature of the salvage yard, the types of materials to be stored, and the anticipated market for salvage purchased and sold by the operator.

5. Number, approximate size(s) and location(s) and intended function(s) or use(s) of proposed or existing buildings on the site(s).

6. General description of surface conditions (topography).

7. Soil and drainage characteristics.

8. Existing natural or manmade features including vegetative cover, water bodies, quarries and rock outcroppings, and drainage ditches.

9. General location and description of existing structures. Also see Section 1204.1 Location Standards.

10. General location and description of existing easements or rights-of-way.

11. Existing and/or proposed covenants and restrictions.

12. Intended improvements.

13. Intended earthwork that would alter the topography.

14. Tentative development and construction schedule.

15. Anticipated project costs.

b. A discussion of the Physical Impacts of the proposed salvage yard shall consider but not be limited to the following items:

Physical Impacts:

1. Earthwork, as it affects drainage, removal of vegetation and soil, and alteration of the natural terrain.

2. Conversion of farmland to non-farm use.

3. Wildlife populations.

4. Groundwater and surface water resources use, depletion, contamination, flow change.

5. Compatibility of the proposal with the surrounding area in terms of land use and visual appearance.

6. Impact on sensitive natural areas such as water recharge areas, stream and river banks, hillsides, forests, wetlands and water bodies.

7. Geologic impacts and limitations of the site,

Social Impacts:

1. Traffic characteristics – type and frequency of traffic; adequacy and safety of existing transportation routes and facilities; origin and destination of traffic.

2. Fire and Police protection – on site measures proposed to minimize the risk of fire and steps to minimize vandalism, injury and damage to the general public.

3. Sewer and water facilities.

4. Proximity and relationship to known historic features.

5. Relationship of the project to the Comprehensive Plan.

Economic Impacts

1. Property tax evaluation.

2. Local employment implication.

3. Expected changes in property values.

The method by which the applicant prepares and presents a CIS shall be in accordance with a standardized outline currently utilized for this purpose by the Planning Commission and Staff.

Section 1203.3 Sketch Plan

A sketch plan shall be submitted with an application for a salvage yard. The sketch plan shall be on white paper and shall show in simple form the layout of the proposed salvage yard. The sketch plan may be drawn free hand at a scale acceptable to the Engineer. Contour lines as shown on the appropriate U.S.G.S. Topographical Quadrangle map should be transferred to the sketch plan. In addition, the sketch plan shall show the following information within 1000 feet of the proposed site's property boundaries:

a. Natural features such as watercourses, rock outcroppings, sink holes, quarries and wooded areas.

b. Areas proposed for the storage of salvage and the specific type of salvage proposed.

c. Location of buildings or structures, including homes.

d. Proposed access and the internal road network.

e. Parking areas for customer and employee parking.

f. Measures proposed to manage stormwater and to minimize erosion. (See Sections 609 and 713 of this document.)

g. Salvage and building setback lines.

h. Proposed fence locations.

i. All properties and owners identified.

The applicant will be required to submit a detailed site plan prepared by a licensed surveyor or engineer indicating the specific site characteristics, proposed stormwater management plans, erosion and sediment controls and detailed construction plans for all improvements. Additional information or detail may be required by the County Engineer.

Section 1203.4 Performance Guarantees

When there appears to be a need to ensure that certain improvements are completed or the salvage yard is maintained and operated in accordance with this Ordinance, the Planning Commission may require that a construction bond, or other form of surety, be provided. The form of surety and the amount shall be acceptable to the Planning Commission and the County Engineer and must be approved by the County Commission.

Section 1203.5 Fees

A fee of five-hundred dollars ($500.00) shall be charged for each application submitted to the Planning Commission for a salvage yard. This fee is in addition to any Improvement Location Permit fee, applicable for the construction of buildings and Public Hearing fees, and other appropriate and applicable fees.

Section 1204. **LOCATION AND SITE DESIGN STANDARDS; OPERATING REQUIREMENTS**

Section 1204.1 Location Standards

A salvage yard shall not be established unless it meets all of the following local standards:

a. No salvage yard shall be located closer than 1000 feet of an existing residence.

b. No salvage yard shall be located within 1000 feet of any existing public or private school, or land owned by the Berkeley County Board of Education, or a Public or private playground, park or recreation area, or church.

c. No salvage yard shall be located within 200 feet from any year-round stream, run, river, pond, or other water body. In addition, salvage yards are prohibited within a Flood Prone Area as determined by the Flood Study prepared for Berkeley County dated November 14, 1986, or the Flood Hazard Boundary Maps dated December 16, 1977.

d. All salvage yards should have direct access to a State highway. Access through a private road may be considered if the applicant provides written evidence that the following criteria is met:

    1. All private road rights-of-way shall be at least 40 feet in width and said roads shall meet the minimum road standards as required by the Berkeley County Subdivision Regulations. Greater right-of-way widths may be required by the County Engineer; and

    2. All private road rights-of-way shall be an exclusive right-of-way; or

    3. All parties of interest in a non-exclusive right-of-way shall consent to the use of the private road for the purposes of a salvage yard.

e. No salvage yard shall be located closer than 100 feet from a property line.

Section 1204.2 Site Design Standards

In establishing a salvage yard, all of the following requirements and standards must be met:

a. Setbacks

    1. All salvage yard areas shall be set back a minimum of 1000 feet from a State road right-of-way and 1000 feet from a private road right-of-way. Where greater setbacks are required by State or Federal Law, the more restrictive shall apply.

2. All salvage material shall be stored no closer than 20 feet from the perimeter fence or screening to allow access for emergency and fire fighting equipment.

3. Any structure or facility intended for the burning, incineration, or crushing of salvage material shall be no closer than 100 feet from and within any fence boundary.

b. Fencing and Screening

1. All outdoor storage of salvage material shall be conducted entirely within an enclosed fence or wall, the minimum height of which will be 10 feet (i.e., 120 inches). Such areas that the fence will be abutting a State road, open field, or any open spaces, a vegetative screen of coniferous trees shall be planted along the exterior perimeter of the fence or wall. All driveways through the fence shall be similarly screened. Such fence or wall shall be constructed on the front, sides and rear of the storage area, in accordance with the setbacks above, and shall be constructed in such a manner that no salvage material is visible from an adjacent property, or private or State road within 1000 feet. Said fencing and screening shall be installed prior to storage of salvage material.

2. The construction of fences or screening shall be uniform and no patchwork type of construction shall be permitted.

3. The cost of construction of fencing and screening shall be bonded, also see Section 1202.2 Definitions, No. 4 Construction Bond.

c. Parking

One off-street parking space shall be provided for each employee. In addition, two spaces per acre of salvage yard area shall be provided for patrons up to a total of 12 spaces. Additional parking spaces may be required by the Planning Commission, depending on the total acreage of the salvage yard.

d. Size

Minimum size for a salvage yard is 25 acres, based upon restrictions within this Ordinance.

Additional site design standards may be required by the Berkeley County Planning Commission at the recommendation of the Planning Commission staff or the County Engineer pursuant to the purposes of this ordinance (Section 1201.2 Purpose).

Section 1204.3 Operating Requirements

All salvage yards located within the unincorporated portions of Berkeley County and subject to this ordinance shall comply with the following requirements:

a. The storage of salvage material outside the perimeter fence or within the setbacks required by the State of West Virginia, and this ordinance whether temporary or permanent shall be prohibited.

b. All fencing and screening shall be maintained in a manner acceptable to the Land Development Coordinator, and all plant material used for screening shall be maintained in a live and healthy condition.

c. All salvage materials shall be stored in such a manner as to prevent the breeding or harboring of rats, insects or other vermin. Where necessary, this shall be accomplished by enclosure in containers, raising material above the ground, separation of types of material, preventing the collection of stagnant water, extermination procedures, or other means.

d. All storm water shall be controlled on site so as to prevent standing water and to minimize any adverse effect on adjoining property.

e. No salvage material shall be allowed to rest upon or protrude over any public street or become scattered or blown off the premises.

f. Salvage shall be stored so as to permit easy access to all salvage for fire fighting purposes, including a 20 foot buffer area around the perimeter of the salvage yard. Access lanes at least 20 feet in width shall be provided between every second row of vehicles.

g. No salvage or other material shall be burned on the premises unless in a structure or facility approved by the local fire service, and if applicable, any other agency having jurisdiction.

h. The storage of electrical transformers, whether temporary or permanent, shall be prohibited.

i. The storage of materials classified as hazardous waste by the state of West Virginia or the Federal Government shall be prohibited.

j. Gasoline, oil, anti-freeze and all other fluids shall be removed from any scrapped engines, vehicles or machinery prior to storage on the premises. All fluids removed shall be properly disposed of off the premises, as per EPA specification.

k. No combustible materials of any kind, other than those necessary for the salvage yard or products of processing salvage material shall be kept on the premises, nor shall the premises be allowed to become a fire hazard.

l. No space not included in the permit approved by the Planning Commission shall be used for the storage of salvage material.

m. The Land User Coordinator or any other representative of the County Planning Commission shall have the right to inspect the premises of any salvage yard, either announced or unannounced, during regular business hours of the salvage yard, for the purposes of enforcing this ordinance.

n. Salvage shall not be stacked to exceed the fence height.

o. It shall be the responsibility of the salvage yard owner/operator to educate and provide each employee with a copy of the current Salvage Yard Regulations.

Section 1205. **ADMINISTRATION, ENFORCEMENT, VIOLATIONS**

Section 1205.1 Administration

This Ordinance shall be administered by an employee of Berkeley County Commission to be known as the Land Use Coordinator. It shall also be the duty of the Land Use Coordinator to function as enforcement officer as it becomes necessary to initiate administrative or judicial remedies against Salvage Yard Ordinance violators. The Land Use Coordinator shall be under the supervision of the Planning Director and, where a Land Use Coordinator has not been appointed by the Planning Commission, the Planning Director shall be designed as Land Use Coordinator.

Section 1205.2 Enforcement

Enforcement of this Ordinance shall be the responsibility of the Land Use Coordinator, who shall make an initial interpretation that a violation has occurred. The Land Use Coordinator shall prepare a written Violation Notice and Directive to Cease and Desist and shall transmit such notice and directive by certified mail, return receipt requested, to the person responsible for the violation. Failure to comply with a Directive to Cease and Desist shall be cause for the Planning Commission to declare the violation a common nuisance. Upon such declaration, the Planning Commission shall instruct the Land Use Coordinator to request the assistance of the County Prosecuting Attorney and/or other legal council and

a. Seek an injunction in the Circuit Court of Berkeley County to restrain the responsible person from continuing the violation cited or seek an injunction requiring removal of structures or land uses from the property involved

Or

b. Proceed by criminal warrant or information against the person in violation; or both "a" and "b".

Section 1205.3 Violations

It shall be unlawful for any person, whether as owner, lessee, principle, agent, employee or otherwise, to violate or permit to be violated any provision of this ordinance.

Section 1205.4 Penalty

Any person violating any provision of this Ordinance, whether as principle, agent or employee, shall be deemed guilty of a misdemeanor and upon conviction shall be punished by a fine of not less than one hundred dollars nor more than one thousand dollars in accordance with Chapter 17, Article 23, Section 9 of the code of West Virginia. Each month, or portion of a month in which a violation of this Ordinance is committed, continued or permitted, shall constitute a separate offense.

Section 1206 **VARIANCE, APPEAL, AMENDMENT, CONFLICT WITH OTHER LAWS, VALIDITY**

Section 1206.1 Variance

Any request for a variance from the provisions of this Ordinance shall be made in written form and shall be submitted to the Planning Commission by the applicant. A variance request shall clearly specify the nature of the variance being requested and the reasons for the request.

A variance request may be granted by the Planning Commission only when it is determined that:

a. The request is not contrary to the public interest.

b. A literal enforcement of this Ordinance will result in unnecessary hardship.

c. The request is not the result of a self-imposed hardship.

d. The spirit of this ordinance will be observed and substantial justice done.

e. Shall not impose or harm neighboring properties or residences.

Section 1206.2 Appeal

An appeal regarding the administrative procedure exercised under the provisions of this Ordinance shall be filed with the Berkeley County Commission.

All appeals shall specify the grounds thereof and shall be filed with the appropriate governmental body within thirty (30) days after the date of the order, decision or procedure complained of.

Section 1206.3 Amendment

By legislative procedure, the Berkeley County Commission may, from time to time, amend, supplement or change the provisions of this Ordinance, with approval by the Berkeley County Commission.

Section1206.4 Conflict With Other Laws

Where the provisions of this Ordinance impose greater restrictions than those of any other ordinance or regulation, the provisions of this Ordinance shall be controlling. Where the provisions of any statute, other ordinance or regulation propose greater restrictions than this Ordinance, the provisions of such statute, ordinance or regulation shall be controlling. This Ordinance shall not be construed in any manner that is not consistent with the purposes and provisions of state law governing the licensing and maintenance of salvage yards.

Section 1206.5 Validity

If any article, section, subsection, paragraph, clause or provision of this Ordinance shall be declared by court of competent jurisdiction to be invalid, such decisions shall not affect the validity of this Ordinance as a whole or any other part thereof.

ATTACHMENT "A"

METHOD OF MEASUREMENT

TO DETERMINE AMOUNT OF SALVAGE

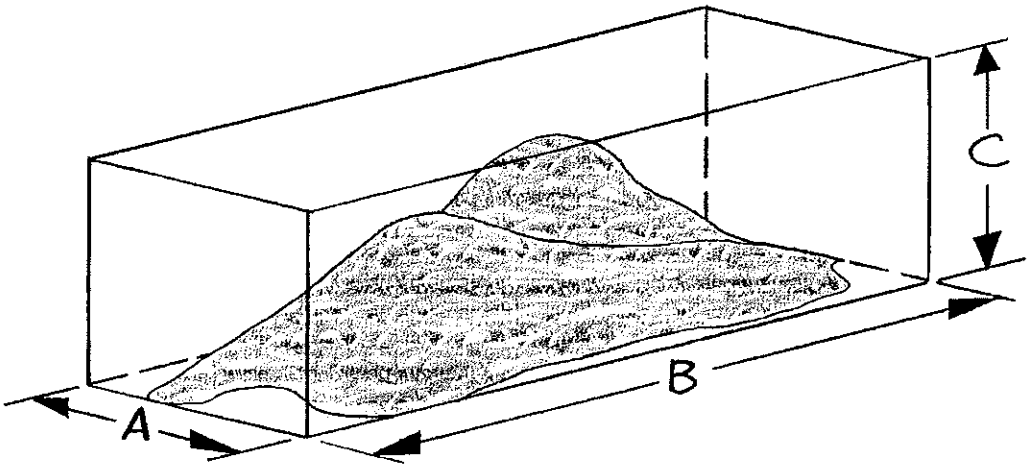

FORMULA

A x B x C x ½ = Quantity cu. yd.'s

Whereas:

A = max. Width in yards
B = max. Length in yards
C = max. Height (or depth) in yards

Separate collections of salvage located on the same site shall be measured separately and the sum total of all collections will be the amount used to determine the quantity of salvage at any given site.

BEFORE THE COUNTY COMMISSION OF BERKELEY COUNTY, WEST VIRGINIA

ENACTMENT OF THE BERKELEY COUNTY COMMISSION REGARDING DESIGN STANDARDS FOR SALVAGE YARDS

WHEREAS, the Berkeley County Subdivision Regulations were adopted by the Berkeley County Court on January 21, 1975, and

WHEREAS, the aforesaid Subdivision Regulations have been from time to time amended by the Commission, most recently by a substantial revision approved on the 20th day of November, 2003, and

WHEREAS, Design Standards for Salvage Yards were adopted by the Berkeley County Commission on August 21, 1984, and

WHEREAS, as an accommodation to the public, the Design Standards for Salvage Yards, being administered by the Berkeley County Planning Commission, were published with the Subdivision Regulation and denominated as Article XII within the publication of the subdivision regulation of Berkeley County, West Virginia, and

WHEREAS, at the time of the recent amendment by the County Commission of the Berkeley County Subdivision Regulations, Article XII has been designated as Campgrounds and Recreational Vehicle Developments, necessitating a reallocation of numerical designation for the design standards for salvage yards

NOW, THEREFORE, upon motion duly made and seconded, the Berkeley County Commission does hereby designate the Design Standards for Salvage Yards to be Article XV for the purpose of permitting publication of the ordinance with the Berkeley County Subdivision Ordinance.

Enacted this 8th day of March, 2005

STEVE C. TEUFEL, PRESIDENT

HOWARD L. STRAUSS, COMMISSIONER

RONALD C. COLLINS, COMMISSIONER.

RECEIVED
JUL 01 2005
Berkeley County
Planning Commission

Appendix E

APPENDIX E

ORDINANCE TO LIMIT HEIGHT OF OBJECTS AND TO REGULATE

PLACEMENT OF CERTAIN STRUCTURES WITHIN SPECIFIC AREAS OF NOISE LEVEL

AROUND EASTERN WEST VIRGINIA REGIONAL AIRPORT

REENACTMENT AND AMENDMENT OF BERKELEY COUNTY'S ORDINANCE REGULATING AND RESTRICTING THE HEIGHT OF STRUCTURES AND OBJECTS OF NATURAL GROWTH, AND OTHERWISE REGULATING THE USE OF PROPERTY, IN THE VICINITY OF THE EASTERN WEST VIRGINIA REGIONAL AIRPORT BY CREATING THE APPROPRIATE ZONES PROTECTION AREAS AND ESTABLISHING THE BOUNDARIES THEREOF, PROVIDING FOR CHANGES IN THE RESTRICTIONS AND BOUNDARIES OF SUCH ZONES; DEFINING CERTAIN TERMS USED HEREIN; REFERRING TO THE EASTERN WEST VIRGINIA REGIONAL AIRPORT PROTECTION MAP WHICH IS INCORPORATED IN AND MADE A PART OF THIS ORDINANCE; PROVIDING FOR ENFORCEMENT; ESTABLISHING A BOARD OF APPEALS; AND IMPOSING PENALTIES.

This Ordinance is re-adopted and amended pursuant to the authority conferred by Chapter 8 Article 24 of the *Code of West Virginia*. It is hereby found that an obstruction has the potential for endangering the lives and property of users of Eastern West Virginia Regional Airport, and property or occupants of land in its vicinity; that an obstruction may affect existing and future instrument approach minimums of Eastern West Virginia Regional Airport; and that an obstruction may reduce the size of areas available for the landing, takeoff, and maneuvering of aircraft, thus tending to destroy or impair the utility of Eastern West Virginia Regional Airport and the public investment therein. It is further found that noise levels contemplated for future aircraft have the potential of endangering the health, safety, peace and comfort of occupants of land adjacent to the Eastern West Virginia Regional Airport, in areas specifically designated on the Protection Map hereinabove referenced. Accordingly, it is declared:

(1) that the creation or establishment of an obstruction has, the potential of being a public nuisance and may injure the region served by Eastern West Virginia Regional Airport;

(2) that it is necessary in the interest of the public health, public safety, and general welfare that the creation or establishment of obstructions that are hazardous to air navigation be prevented; and

(3) that the prevention of these obstructions should be accomplished, to the extent legally possible;

(4) that the building and/or maintenance of residential and other noise sensitive uses within the 75 decibel and above noise level areas designated on the Protection Map incorporated herein shall be considered a public nuisance, potentially harmful to occupants thereof and to the continued effective use of the airport property these regulations are intended to protect; and

(5) that the future building of residential and other noise sensitive uses in the noise level areas designated between 65 and 75 decibels is required to include noise mitigation as specifically set forth and recommended in current Federal Aviation Administration regulations.

It is further declared that the prevention of the creation or establishment of hazards to air navigation, the elimination, removal, alteration or mitigation of hazards to air navigation, or marking and lighting of obstructions are public purposes for which a political subdivision may raise and expend public funds and acquire land or interests in land.

IT IS HEREBY ORDAINED BY THE COUNTY COMMISSION OF BERKELEY COUNTY, WEST VIRGINIA, AS FOLLOWS:

SECTION I: SHORT TITLE

This Ordinance shall be known and may be cited as Eastern West Virginia Regional Airport Approach Protection Ordinance.

SECTION II: DEFINITIONS

As used in this Ordinance, unless the context otherwise requires:

1. AIRPORT — Means Eastern West Virginia Regional Airport.

2. AIRPORT ELEVATION — 557 feet above mean sea level.

3. APPROACH SURFACE — A surface longitudinally centered on the extended runway centerline, extending outward and upward from the end of the primary surface and at the same slope as the approach zone height limitation slope set forth in Section IV of this Ordinance. In plan the perimeter of the approach surface coincides with the perimeter of the approach zone.

4. APPROACH, TRANSITIONAL, HORIZONTAL, AND CONICAL ZONES - These zones are set forth In Section III of this Ordinance.

5. BOARD OF APPEALS — A board consisting of 5 members appointed by the Berkeley County Commission as provided in Chapter 8, Article 24 of the West Virginia Code.

6, CONICAL SURFACE — A surface extending outward and upward from the periphery of the horizontal surface at a slope of 20 to 1 for a horizontal distance of 4,000 feet.

7. HAZARD TO AIR NAVIGATION — An obstruction determined to have an adverse effect on the, safe and efficient utilization of the navigable airspace.

8. HEIGHT — For the purpose of determining the height limits in, all zones set forth in this Ordinance and shown on the zoning map, the datum shall be mean sea level elevation unless otherwise specified.:

9. HORIZONTAL SURFACE — A horizontal plane 150 feet above the established airport elevation, the perimeter of which in plan coincides with the perimeter of the horizontal zone.

10. LARGER THAN UTILITY RUNWAY — A runway that is constructed for and intended to be used by propeller driven aircraft of greater than 12,500 pounds maximum gross weight and Jet powered aircraft. ,

11. NONCONFORMING USE — Any pre-existing structure, object of natural growth, or use of land which is in existence as of the effective date of this ordinance and is consistent with the provisions of this Ordinance or any amendment thereto.

12. NONPRECISION INSTRUMENT RUNWAY — A runway having an existing instrument approach procedure utilizing air navigation facilities with only horizontal guidance, or area type navigation equipment, for which a straight—in nonprecision instrument approach procedure has been approved or planned.

13. OBSTRUCTION — Any structure, growth, or other object, including a mobile object, which exceeds a limiting height set forth in Section IV of this Ordinance.

14. PERSON — An individual, firm, partnership, public or private corporation, company, association, joint stock association or government entity; includes a trustee, a receiver, an assignee, or a similar representative of any of them.

15. PRECISION INSTRUMENT RUNWAY — A runway having an existing instrument approach procedure utilizing an Instrument Landing System (ILS) or a Precision Approach Radar (PAR). It also means a runway for which a precision approach system is planned and is so indicated on an approved airport layout plan or any other planning document.

16. PRIMARY SURFACE — A surface longitudinally centered on a, runway. When the runway has a specially prepared hard surface, the primary surface extends 200 feet

beyond each end of that runway; for military runways or when the runway has no specially prepared hard surface, or planned hard surface, the primary surface ends at each end of that runway. The width of the primary surface is set forth in Section III of this Ordinance. The elevation of any point on the primary surface is the same as' the elevation of the nearest point on the runway centerline.

17., RUNWAY — A defined area on an airport prepared for landing and takeoff of aircraft along its length.

18. STRUCTURE —An object, including a mobile object, constructed or installed by, man, including but not limited to buildings, towers, cranes, smokestacks, earth formation, and overhead transmission lines.

19. TRANSITIONAL SURFACES — These surfaces extend outward at 90 degree angles to the runway centerline and the runway centerline extended at a slope of seven (7) feet horizontally for each foot vertically from the sides of the primary and approach surfaces to where they intersect the horizontal and conical surfaces. Transitional surfaces for those portions of the precision approach surfaces, which project through and beyond the limits of the conical surface, extend a distance of 5,000 feet measured horizontally from the edge of the approach surface and at 70 degree angles to the extended runway centerline.

20. TREE - Any woody perennial plant.

2'l. UTILITY RUNWAY — A runway that is constructed for and intended to be used by propel1er driven aircraft of 12, 500 pounds maximum gross weight and less

22. VISUAL RUNWAY — A runway intended solely for the operation of aircraft using visual approach procedures.

23. NOISE LEVEL AREAS – Areas within the footprint of the airport runways in which the level of noise currently created and expected to be created by future aircraft uses exceeds safe decibel levels, specifically, levels of 65 decibels and above.

SECTION III: AIRPORT ZONES

In order to carry out the provisions of this Ordinance, there are hereby created and established certain zones which include all of the land lying beneath the approach surfaces, transitional surfaces, horizontal surfaces, and conical surfaces as they apply to Eastern West Virginia Regional Airport. Such zones are shown on Eastern West Virginia Regional Airport Protection Map consisting of one sheet, dated May 4, 2004, which is attached to this Ordinance and made a part hereof. An area located in more than one of the following zones is considered to be only in the zone with the more restrictive height limitation. The various zones are hereby established and defined as follows; -

1. Utility Runway Visual Approach Zone — The inner edge of this approach zone coincides with the width of the primary surface and is 250 feet wide. The approach zone expands

outward uniformly to a width of 1,250 feet at a horizontal distance of 5,000 feet from the primary surface. Its centerline is the continuation of the centerline of the runway.

2. Utility Runway Nonprecision Instrument Approach Zone — The inner edge of this approach zone coincides with the width of the primary surface and is 500 feet wide. The approach zone expands outward uniformly to a width of 2,000 feet at a horizontal distance 5,000 feet from the primary surface. Its centerline is the continuation of the centerline of the runway.

3. Runway Larger Than Utility Visual Approach Zone — The inner edge of this approach zone coincides with the width of the primary surface and is 500 feet wide. The approach zone expands outward uniformly to a width of 1,500 feet at a horizontal distance of 5,000 feet from the primary surface. Its centerline is the continuation of the centerline of the runway.

4, Runway Larger Than Utility With A Visibility Minimum Greater Than 3/4 Mile Nonprecision Instrument Approach Zone — The inner edge of this approach zone coincides with the width of the primary surface and is 500 feet wide. The approach zone expands outward uniformly to a width of 3,500 feet at a horizontal distance of 10,000 feet from the primary surface. Its centerline is the continuation of the centerline of the runway.

5. Runway Larger Than Utility With A Visibility Minimum As Low As ¾ Mile Nonprecision Instrument Approach Zone – The inner edge of this approach zone coincides with the width of the primary surface and is 1,000 feet wide. The approach zone expands outward uniformly to a width of 16,000 feet at a horizontal distance of 50,000 feet from the primary surface. Its centerline is the continuation of the centerline of the runway.

6. Precision Instrument Runway Approach Zone — The inner edge of this -approach zone coincides with the width of the primary surface and is 1,000 feet wide. The approach zone expands outward uniformly to a width of 16,000 feet at a horizontal distance of 50,000 feet from the primary surface. Its centerline is the continuation of the centerline of the runway.

7. Transitional Zones — The transitional zones are the areas beneath the transitional surfaces.

8. Horizontal Zone – The horizontal zone is established by swinging arcs of 5,000 feet radii for all runways designated utility or visual and 10,000 feet for all others from the center of each end of the primary surface of each runway and connecting the adjacent arcs by drawing lines tangent to those arcs. The horizontal zone does not include the approach and transitional zones.

9. Conical Zone — The conical zone is established as the area that commences at the periphery of the horizontal zone and extends outward therefrom a horizontal distance of

4,000 feet.

10. Runway Protection Zone – Such zones are a trapezoidal area off the end of the runway end that serves to enhance the protection of people and property on the ground in the event an aircraft lands or crashes beyond the runway end. Runway Protection Zones underlie a portion of the approach closest to the airport.

SECTION IV: AIRPORT ZONE HEIGHT LIMITATIONS

Except as otherwise provided in this Ordinance, no structure shall be erected, altered, or maintained, and no tree shall be allowed to grow in any zone created by this Ordinance to a height in excess of the applicable height herein established for such zone. Such applicable height limitations are hereby established for each of the zones in question as follows:

1. Utility Runway Visual Approach Zone — Slopes twenty (20) feet outward for each foot upward beginning at the end of and at the same elevation as the primary surface and extending to a horizontal distance of 5, 000 feet along the extended runway centerline.

2. Utility Runway Nonprecision Instrument Approach Zone — Slopes twenty (20) feet outward for each foot upward beginning at the end of and at the same elevation as the primary surface and extending to a horizontal distance of 5,000 feet along the extended runway centerline.

3. Runway Larger Than Utility Visual Approach Zone — Slopes twenty (20) feet outward for each foot upward beginning at the end of and at the same elevation as the primary surface and extending to: a horizontal distance of 5,000 feet along the extended runway centerline.

4. Runway Larger Than Utility With A Visibility Minimum Greater Than 3/4 Mile Nonprecision Instrument Approach Zone — Slopes thirty-four (34) feet outward for each foot upward beginning at the end of and at the same elevation as the primary surface and extending to a horizontal distance of 10, 000 feet along the extended runway centerline.

5. Runway Larger Than Utility With A Visibility Minimum As Low As 3/4 Mile Nonprecision Instrument Approach Zone — Slopes thirty-four (34) feet outward for each foot upward beginning at the end of and at the same elevation as the primary surface and extending to a horizontal distance of 10,000 feet along the extended runway centerline.

6. Precision Instrument Runway Approach Zone — Slopes fifty (50) feet outward for each foot upward beginning at the end of and at the same elevation as the primary surface and extending to a horizontal distance of 10,000 feet along the extended runway centerline; thence slopes upward, forty (40) feet horizontally for each foot vertically to an additional horizontal distance of 40,000 feet along the extended runway centerline.

7. Transitional Zones — Slope seven (7) feet outward for each foot upward beginning at the sides of and at the same elevation as the primary surface and the approach surface, and extending to a height of 150 feet above the airport elevation which is 557 feet above mean sea level. In addition to the foregoing, there are established height limits sloping seven (7) feet outward for each foot upward beginning at the sides of and the same elevation as the approach surface, and extending to where they intersect the conical surface. Where the precision instrument runway approach zone projects beyond the conical zone, there are established height limits sloping seven (7) feet outward for each foot upward beginning at the sides of and the same elevation as the approach surface, and extending a horizontal distance of 5,000 feet measured at 90 degree angles to the extended runway center line

8. Horizontal Zone — Established at 150 feet above the airport elevation or at a height of 250 feet above mean sea level.

9. Conical Zone — Slopes twenty (20) feet outward for each foot upward beginning at the periphery of the horizontal zone and at 150 feet above the airport elevation and extending to a height of 350 feet above the airport elevation.

SECTION V: USE RESTRICTION

Notwithstanding any other provisions of this Ordinance, no use may be made of land or water within any zone established by this Ordinance in such a manner as to create electrical interference with navigational signals or radio communication between the airport and aircraft, make it difficult for pilots to distinguish between airport lights and others, result in glare in the eyes of the pilots using the airport, impair visibility in the vicinity of the airport, create bird strike hazards, or otherwise in any way endanger or interfere with the landing, takeoff, or maneuvering of aircraft intending to use the airport.

SECTION VI: NONCONFORMING USES

1. Regulations Not Retroactive — The regulations prescribed in this Ordinance shall not be construed to require the removal, lowering, or other change or alteration of any structure or tree not conforming to the regulations at the effective date of this Ordinance, or otherwise interfere with the continuance of a nonconforming use. Nothing contained herein shall require any change in the construction, alteration, or intended use of any structure, the construction or alteration of which was begun prior to the effective date of this Ordinance, and is actively proceeding to completion. Provided, however, That nothing herein shall be construed so as to permit nonconforming uses such as residences and places of public assembly (Churches, schools, hospitals, office buildings, shopping centers, and other uses with similar concentrations of persons typify places of public assembly.) to remain within the Runway Protection Zones or in the areas of 75 decibel

noise level and above established herein or to be constructed within such Zones and noise level areas if such construction was commenced prior to the effective date of this Reenacted and Amended Ordinance.

2. Marking and Lighting — Notwithstanding the preceding provision of this Section, the owner of any existing nonconforming structure or tree is hereby required to permit the installation, operation, and maintenance thereon of such markers and lights as shall be deemed necessary by the Planning Commission or its designee to indicate to the operators of aircraft in the vicinity of the airport the presence of such airport obstruction. Such markers and lights shall be installed, operated, and maintained at the expense of the Eastern West Virginia Regional Airport Authority.

3. Mandatory Disclosures ---All sellers of real property situate in Berkeley County, including owners of such property and real estate agents assisting in the sale of such property, which property is located so as to be affected by the provisions of this Ordinance, are hereby required to disclose, in writing, to potential purchasers of such property the applicable restrictions on the use of such property and the noise mitigation requirements which obtain pursuant to this Ordinance.

SECTION VII: PERMITS

1. Future Uses — Except as specifically provided in a, b and c hereunder, no material change shall be made in the use of land, no structure shall be erected or otherwise established, and no tree shall be planted in any zone hereby created unless a permit therefor shall have been applied for and granted. Each application for a permit shall indicate the purpose for which the permit is desired, with sufficient data to determine whether the resulting use, structure, or tree would conform to the regulations, herein prescribed. If such determination is in the affirmative, the permit shall be granted. No permit for use inconsistent with the provisions of this ordinance shall be granted unless a variance has been approved in accordance with Section VII, Article 4.

a. In the area lying within the limits of the horizontal zone and conical zone, no permit shall be required for any tree or structure less than seventy-five feet of vertical height above the ground, except when, because of terrain, land contour, or topographic features, such tree or structure would extend above the height limits prescribed for such zones.

b. In areas lying within, the limits of the approach zones but at a horizontal distance of not less than 4,200 feet from each end of the runway, as the same exist or are contemplated at the time of re-adoption and reenactment of this ordinance, all as shown on the Protection map incorporated herein, no permit shall be required for any tree or structure less than seventy—five feet of vertical height above the ground, except when such tree or structure would extend above the height limit prescribed for such approach zones.

c. In the areas lying within the limits of the transition zones beyond the perimeter of

the horizontal zone, no permit shall be required for any tree or structure less than seventy-five feet of vertical height above the ground, except when such tree or structure, because

of terrain, land contour, or topographic features, would extend above the height limit prescribed for such transition zones.

Nothing contained in any of the foregoing exceptions shall be construed as permitting or intending to permit any construction, or alteration of any structure, or growth of any tree in excess of any of the height limits established by this Ordinance.

2. Existing Uses — No permit shall be granted that would allow the establishment or creation of an obstruction or permit a nonconforming use, structure, or tree to become a greater hazard to air navigation, than it was on the effective date of this Ordinance or any amendments thereto or than it is when the application for a permit is made. Except as indicated, all applications for such a permit shall be granted.

3. Nonconforming Uses Abandoned or Destroyed - If any nonconforming use of land shall cease for any reason whatsoever through a period of 180 consecutive days, said nonconforming use shall be deemed to have been abandoned and the applicable regulations shall apply to the area in question. Whenever the Planning Director determines that a nonconforming tree or structure has been abandoned or destroyed by any means to an extent of more that 50 percent of its replacement cost at the time of destruction, no permit shall be granted that would allow such structure or tree to exceed the applicable height limit or otherwise deviate from these regulations.

4. Variances - Any person desiring to erect or increase the height of any structure, or permit the growth of any tree, or use property not in accordance with the regulations prescribed in this Ordinance, may apply to the Board of Appeals for a variance from such regulations. The application for variance shall be accompanied by a determination from the Federal Aviation Administration as to the effect of the proposal on the operation of air navigation facilities and the safe, efficient use of navigable airspace. Such variances shall be allowed where it is duly found that a literal application or enforcement of the regulations will result in unnecessary hardship and relief granted, will not be contrary to the public interest, will not create a hazard to air navigation, and will be in accordance with the intent of this Ordinance. Additionally, no application for variance to the requirements of this Ordinance may be considered by the Board of Appeals unless a copy of the application has been furnished to the Airport Manager for advice as to the aeronautical effects of the variance. If the Airport Manager does not respond to the application within 15 days after receipt, the Board of Appeals may act on its own to grant or deny said application. .

5. Obstruction Marking and Lighting — Any permit or variance granted may, if such action is deemed advisable to effectuate the purpose of this Ordinance and be reasonable in the circumstances, be so conditioned as to require the owner of the structure or tree in question to install, operate, and maintain, at the owner's expense such marking and lights as may be necessary. If deemed proper by the Board of Appeals, this condition may be

modified to require the owner to permit the Eastern West Virginia Regional Airport

Authority, at its own expense, to install, operate, and maintain the necessary markings and lights.

SECTION VIII: ENFORCEMENT

It shall be the duty of the Planning Commission or its designee to administer and enforce the regulations prescribed herein. Applications for permits and variances shall be made to the Planning Commission or its designee upon a form published for that purpose. Applications required by this Ordinance to be submitted to the Planning Commission or its designee shall be promptly considered and granted or denied. Application for action by the Board of Appeals shall be forthwith transmitted by the Planning Commission..

SECTION IX: BOARD OF APPEALS

1. There is hereby created a Board of Appeals to have and exercise the following powers: (1) to expeditiously hear and decide appeals from any order, requirement, decision, or determination made by the Planning Commission or its designee in the enforcement of this Ordinance; (2) to expeditiously hear and decide special exceptions to the terms of this Ordinance upon which such Board of Appeals under such regulations may be required to pass; and (3) to expeditiously hear and decide specific variances.

2. The Board of Appeals shall consist of five members appointed by the Berkeley County Commission and each shall serve for a term of three years until a successor is duly appointed and qualified. Of the members first appointed, one shall be appointed for a term of one year, one for a term of two years, and one for a term of three years.

3. The Board of Appeals shall adopt rules for its governance and in harmony with the provisions of this Ordinance and Chapters 8, Article 24 of the West Virginia Code. Meetings of the Board of Appeals shall be held at the call of the Chairperson and at such other times as the Board of Appeals may determine. The Chairperson or, in the absence of the Chairperson, the Acting Chairperson may administer oaths and compel the attendance of witnesses. All hearings of the Board of Appeals shall be public. The Board of Appeals shall keep minutes of its proceedings showing the vote of each member upon each question; or if absent or failing to vote, indicating such fact, and shall keep records of its examinations and other official actions, all of which shall immediately be filed in the office of the Planning Commission.

4. The Board of Appeals shall make written findings of facts and conclusions of law giving the facts upon which it acted and its legal conclusions from such facts in reversing, affirming, or modifying any order, requirement, decision, or determination which comes before it under the provisions of this Ordinance.

5. The concurring vote of a majority of the members of the Board of Appeals shall be sufficient to reverse any order, requirement, decision, or determination of the Planning Commission or its designee or decide in favor of the applicant on any matter upon which it is required to pass under this Ordinance, or to effect variation to this Ordinance.

SECTION X: APPEALS

1. Any person aggrieved by any decision of the Planning Commission or its designee, made in the administration of this Ordinance, may appeal to the Board of Appeals.

2. All appeals hereunder must be taken within 30 days of the date of the decision appealed from and as provided by the rules of the Board of Appeals, by filing with the Planning Commission or its designee a notice of appeal specifying the grounds thereof. The Planning Commission or its designee shall forthwith transmit to the Board of Appeals all the papers constituting the record upon which the action appealed from was taken.

3. An appeal shall stay all proceedings in furtherance of the action appealed from unless the Planning Commission or its designee certifies to the Board of Appeals, after the notice of appeal has been filed with it, that by reason of the facts stated in the certificate a stay would in the opinion of the Planning Commission or its designee cause imminent peril to life or property. In such case, proceedings shall not be stayed except by restraining order of the Berkeley County Circuit Court on notice to the Planning Commission.

4. Publication of Notice — The Planning Commission or its designee shall publish once at the expense of the applicant, a notice of the public hearing. This notice shall be published in a paper of general circulation in the city or county, not less than thirty days prior to the date set for the hearing. The notice shall include the application number and the date, time and place of the hearing, summary of the variance or appeal, and the location of the property, its area, and name of the owner.

5. The Board of Appeals may, in conformity with the provisions of this Ordinance, reverse or affirm, in whole or in part, or modify the order, requirement, decision, or determination appealed from and may make such order, requirement, decision, or determination as may be appropriate under the circumstances and forthwith notify the appellant of its decision in writing including the reasons therefore.

SECTION XI: JUDICIAL REVIEW

Any person aggrieved by any decision of the Board of Appeals may appeal to the Circuit Court as provided in Article 24 of Chapter 8 of the *Code of West Virginia.*

SECTION XII: PENALTIES

Each violation of this Ordinance or of any regulation, order, or ruling promulgated hereunder shall constitute a misdemeanor and be punishable by a fine of not less than $500.00 nor more than $1,000.00; and each day a violation continues to exist shall constitute a separate offense.

SECTION XIII: CONFLICTING REGULATIONS

Where there exists a conflict between any of the regulations or limitations prescribed in this Ordinance and any other regulations applicable to the same area, whether the conflict be with respect to the height of structures or trees, and the use of land, or any other matter, the more stringent limitation or requirement shall govern and prevail.

SECTION XIV: SEVERABILITY

If any of the provisions of this Ordinance or the application thereof to any person or circumstances are held invalid, such invalidity shall not affect other provisions or applications of the Ordinance which can be given effect without the invalid provision or application, and to this end, the provisions of this Ordinance are declared to be severable.

SECTION XV: EFFECTIVE DATE

The effective date of this reenactment and amendment shall be upon the adoption of the same by the Berkeley County Commission.
Re-adopted as amended this the 2d day of September, 2004

_____
Steven C. Teufel, President

_____
John E. Wright, Commissioner

_____
Howard L. Strauss, Commissioner

SECTION XIII: CONFLICTING REGULATIONS

Where there exists a conflict between any of the regulations or limitations prescribed in this Ordinance and any other regulations applicable to the same area, whether the conflict be with respect to the height of structures or trees, and the use of land, or any other matter, the more stringent limitation or requirement shall govern and prevail.

SECTION XIV: SEVERABILITY

If any of the provisions of this Ordinance or the application thereof to any person or circumstances are held invalid, such invalidity shall not affect other provisions or applications of the Ordinance which can be given effect without the invalid provision or application, and to this end, the provisions of this Ordinance are declared to be severable.

SECTION XV: EFFECTIVE DATE

The effective date of this reenactment and amendment shall be upon the adoption of the same by the Berkeley County Commission.
Re-adopted as amended this the 2d day of September, 2004

Steven C. Teufel, President

John E. Wright, Commissioner

Howard L. Strauss, Commissioner

1262404.1

County Commission of Berkeley County

126 WEST KING STREET
MARTINSBURG, WEST VIRGINIA 25401
PHONE (304) 264-1923

www.berkeleycountycomm.org

THE COMMISSION

HOWARD L. STRAUSS, COMMISSIONER
POST OFFICE BOX 1812
MARTINSBURG, WEST VIRGINIA 25402

STEVEN C. TEUFEL, COMMISSIONER
POST OFFICE BOX 1050
MARTINSBURG, WEST VIRGINIA 25402

JOHN E. WRIGHT, COMMISSIONER
POST OFFICE BOX 357
BUNKER HILL, WEST VIRGINIA 25413

DEBORAH HAMMOND
COUNTY ADMINISTRATOR

SHERRY A. CAIN
ADMINISTRATIVE SECRETARY

MEMORANDUM

TO: Pamela Jean Games-Neely, Prosecuting Attorney.
Sue Ann Morgan, Planning Director
W. Randy Smith, Sheriff
William Teach, County Engineer

FROM: Steven C. Teufel, President SCT
Howard L. Strauss, Commissioner HLS
John E. Wright, Commissioner

DATE: September 9, 2004

RE: Ordinance to Limit Height of Objects and to Regulate the Placement of Certain Structures Within Specific Areas of Noise Level Around the Eastern West Virginia Regional Airport

At the Thursday, September 3, 2004 meeting of the Berkeley County Commission action was taken to approve the attached ordinance with amendments. The revised version was provided to the Commission at the September 9 meeting and signed by the Commission. A copy of the final version of this ordinance is attached for your records.

County Engineer William Teach will be working with the original map related to this ordinance so that it can be scaled in a manner that will create an overlay on the County's MSAG maps. In this manner, the map will be accessible via the County's web-site for evaluation by all users.

Should you have any questions, do not hesitate to contact the offices of the Berkeley County Commission at 264-1923.

Doc: memapo/st/hs/jw/dh
Attachment: Airport Protection Ordinance

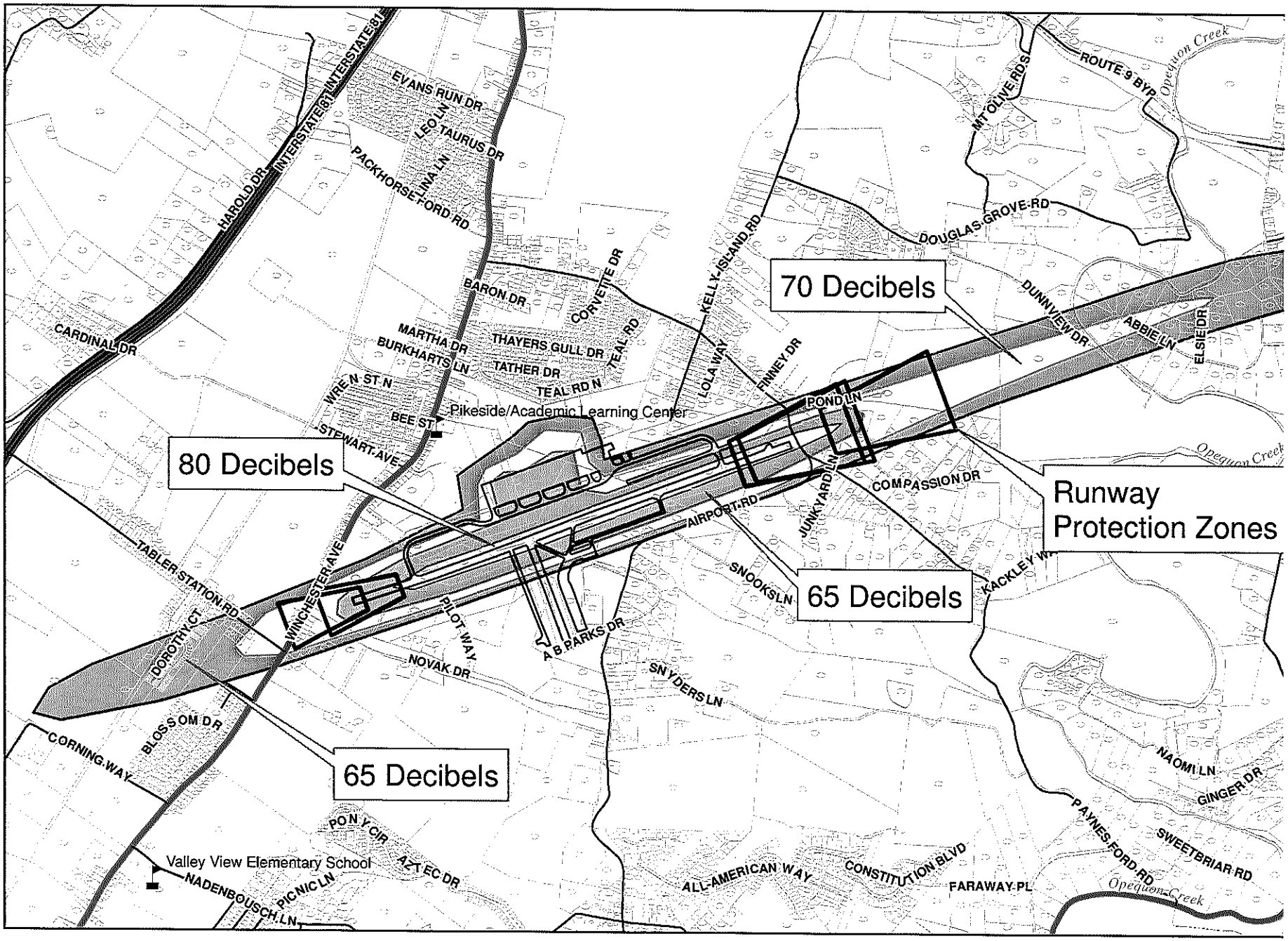
Runway Protection Zones
70 Decibels
80 Decibels
65 Decibels
65 Decibels
Pikeside/Academic Learning Center
Valley View Elementary School
INTERSTATE 81
INTERSTATE 81
HAROLD DR
CARDINAL DR
EVANS RUN DR
LEO LN
TAURUS DR
PACKHORSE FORD RD
LINA LN
BARON DR
CORVETTE DR
MARTHA DR
BURKHARTS LN
THAYERS GULL DR
TATHER DR
TEAL RD
TEAL RD N
WRE N ST N
BEE ST
STEWART AVE
KELLY ISLAND RD
LOLA WAY
FINNEY DR
POND LN
MT OLIVE RD S
ROUTE 9 BYP
Opequon Creek
DOUGLAS GROVE RD
DUNNVIEW DR
ABBIE LN
ELSIE DR
COMPASSION DR
JUNKYARD LN
AIRPORT RD
KACKLEY W
SNOOKS LN
TABLER STATION RD
WINCHESTER AVE
PILOT WAY
A B PARKS DR
NOVAK DR
SNYDERS LN
DOROTHY CT
BLOSSOM DR
CORNING WAY
PONY CIR
AZTEC DR
NADENBOUSCH LN
PICNIC LN
ALL-AMERICAN WAY
CONSTITUTION BLVD
FARAWAY PL
PAYNES FORD RD
SWEETBRIAR RD
NAOMI LN
GINGER DR

BERKELEY COUNTY
FLOODPLAIN ORDINANCE

AN ORDINANCE ESTABLISHING A FLOODPLAIN AREA AND REQUIRING ALL CONTRACTORS, PERSONS, PARTNERSHIPS, BUSINESSES, AND CORPORATIONS TO OBTAIN A PERMIT FOR DEVELOPMENT AND THE CONSTRUCTION, SUBSTANTIAL IMPROVEMENT , OR RELOCATION OF ANY BUILDING OR STRUCTURE; PROVIDNG FOR CERTAIN MINIMUM STANDARDS FOR CONSTRUCTION WITHIN THE FLOODPLAIN AREA AND SETTING FORTH SPECIAL PROCEDURES FOR SUBMISSION AND APPROVAL OF PLANS; AND ESTABLISHING PENALTIES FOR ANY PERSON WHO FAILS TO COMPLY WITH THE REQUIREMENTS OR PROVISIONS OF THIS ORDINANCE.

BE IT ENACTED AND ORDAINED by the Berkeley County Commission, as follows:

ARTICLE I - GENERAL PROVISIONS

Section 1.1 Intent

The intent of this ordinance is to:

A. Promote the general health, welfare, and safety of the community.

B. Encourage the utilization of appropriate construction practices in order to prevent or minimize flood damage in the future.

C. Minimize danger to public health and safety by protecting water supply and sanitary sewage disposal in cooperation with the County Sanitarian, and to protect natural drainage.

D. Assure the County Assessor obtains information concerning improvement of real property as required by WV State Code 11-3-3A.

E. Assure County E-911 addresses are obtained to maintain the currency of established emergency response dispatch systems.

F. Reduce financial burdens imposed on the community, its governmental units, and its residents, by preventing the unwise design and construction of development in areas subject to flooding.

Section 1.2 Abrogation and Greater Restrictions

This ordinance supersedes any ordinance currently in effect in flood prone areas. Any ordinance, however, shall remain in full force and effect to the extent that its provisions are more restrictive.

Section 1.3 Applicability

It shall be unlawful for any contractor, person, partnership, business, or corporation to undertake or cause to be undertaken, any development, new construction, substantial improvement, repair of substantial damage, or the placement or relocation of any structure (including manufactured homes) within the Berkeley County Flood Plain Area, unless a permit application has been completed and a permit or certificate of compliance has been obtained from the Floodplain Administrator. In addition, where land partially or fully in the floodplain is to be developed, subdivided, utilized for a manufactured home park or subdivision or otherwise developed, a site plan with elevation data must be submitted to, and approved by, the Floodplain Administrator prior to any development.

Provision of all other codes, ordinances, and regulations shall be applicable insofar as they are consistent with the provisions of this ordinance and the community's need to minimize the hazards and damage resulting from flooding.

Section 1.4 Matters not provided for specifically

Where conditions are encountered that are not specifically provided for herein, the floodplain administrator shall determine the applicability of the provisions of this ordinance in accordance with its intent, and shall require the applicant to take appropriate measures pursuant to such determination.

ARTICLE II - INTERPRETATIONS AND DEFINITIONS

Section 2.1 Interpretations

A. For the purpose of this ordinance, the following interpretations shall apply:

1. Words used in the present tense include the future tense
2. The singular includes the plural.
3. The plural includes the singular.
4. The Term "shall" or "will" is always mandatory.
5. The word "building" or "structure" shall be construed as if followed by the phrase "or part thereof".
6. The word "Ordinance" shall refer to the Floodplain Ordinance.

Section 2.2 Definitions

General

Unless specifically defined below, words and phrases used in this ordinance shall be interpreted so as to give this ordinance it's most reasonable application.

Appurtenant Structure

A structure on the same parcel of property as the principal structure and the use of which is incidental to the use of the principal structure. This does not include a gas or liquid storage tank.

Base Flood

The flood, which has been selected to serve as the basis upon which the floodplain management provisions of this and other ordinances have been prepared; for purposes of this ordinance, the one-hundred (100) year flood.

Basement

Any area of the building having its floor sub grade (below ground level) on all sides.

Certificate of Occupancy

A certification that the entire development, including the elevation of fill or the lowest floor of a structure is in compliance with all of the provisions of this ordinance.

Compensatory Storage

An artificially excavated, hydraulically equivalent volume of storage within the Special Flood Hazard Area used to balance the loss of natural flood storage capacity when artificial fill or structures are placed within the floodplain.

Contractor - WV State Code 21-11-3(c)

A person who in any capacity for compensation, other than as an employee of another, undertakes, offers to undertake, purports to have the capacity to undertake, or submits a bid to construct, alter, repair, add to, subtract from, improve, move, wreck or demolish any building, highway, road, railroad, structure or excavation associated with a project, development or improvement, or to do any part thereof, including the erection of scaffolding or other structures or works in connection therewith, where the cost of the undertaking is one thousand dollars or more. Contractor includes a construction manager who performs management and counseling services on a construction project for a professional fee.

Contractor does not include:

(1) One who merely furnishes materials or supplies without fabricating or consuming them in the construction project.

(2) A person who personally performs construction work on the site of real property which the person owns or leases whether for commercial or residential purposes;

(3) A person who is licensed or registered as a professional and who

functions under the control of any other licensing or regulatory board, whose primary business is real estate sales, appraisal, development, management and maintenance, who acting in his or her respective professional capacity and any employee of such professional, acting in the course of his or her employment, performs any work which may be considered to be performing contracting work

(4) A pest control operator licensed under the provisions of section seven, article sixteen-a, chapter nineteen of this code to engage in the application of pesticides for hire, unless the operator also performs structural repairs exceeding one thousand dollars on property treated for insect pests; or

(5) A corporation, partnership or sole proprietorship whose primary purpose is to prepare construction plans and specifications used by the contractors defined in this section and who employs full time a registered architect licensed to practice in this state or a registered professional engineer licensed to practice in this state. Contractor also does not include employees of such corporation, partnership or sole proprietorship.

Development

Any man-made change to improved or unimproved real estate, including but not limited to buildings or other structures, mining, dredging, filling, grading, paving, excavation or drilling operations or storage of equipment or materials.

Flood

A general and temporary inundation of normally dry land areas.

Floodplain

(1) A relatively flat or low land area adjoining a river, stream, or watercourse which is subject to partial or complete inundation;

(2) An area subject to the unusual and rapid accumulation or runoff of surface waters from any source.

Floodplain Administrator

The Planning Director shall be the floodplain Administrator. The Floodplain Administrator may also be identified as the Floodplain Manager.

Floodway

The channel of a river or other watercourse and the adjacent land area that must be reserved to discharge the base flood without increasing the water surface elevation of that flood more than one foot at any point.

Flood proofing

Any combination of structural and non-structural additions, changes or adjustments to structures which reduce or eliminate flood damage to real estate or improved real property, water and sanitary facilities, structures and their contents.

Freeboard

A factor of safety usually expressed in feet above a flood level for purposes of floodplain management. Freeboard tends to compensate for unknown factors that may contribute uncertainty to flood heights of any given flood and floodway condition, such as wave action, blockage at stream crossings, and increased runoff from urbanization of the watershed.

Historic Structure

Any structure that is:

(a) Listed individually in the National Register of Historic Places (a listing maintained by the Department of Interior) or preliminarily determined by the Secretary of the Interior as meeting the requirements for individual listing on the National Register;

(b) Certified or preliminarily determined by the Secretary of the Interior as contributing to the historical significance of a registered historic district or a district preliminarily determined by the Secretary to qualify as a registered historic district

(c) Individually listed on a state inventory of historic places in states with historic preservation programs which have been approved by the Secretary of the Interior; or,

(d) Individually listed on a local inventory of historic places in communities with historic preservation programs that have been certified either:

(i) By an approved state program as determined by the Secretary of the Interior; or,

(ii) Directly by the Secretary of Interior in states without approved programs.

Licensed Manufactured Home Dealer

A business licensed to sell Manufactured Homes in the state of WV as set forth in the WV state code.

Licensed Manufactured Home Installer

A contractor licensed to install Manufactured Homes in WV as set forth in the WV State Code.

Licensed Professional Surveyor

Any person licensed by the WV state board of examiners of land surveyors to engage in the practice of land surveying as defined in WV state code.

Lowest Floor

The lowest floor of the lowest enclosed area (including basement). An unfinished enclosure constructed with flood resistant materials as defined in the FEMA Technical Bulletin 2-93 (FIA-TB-2) and usable solely for parking of vehicles, building access or storage in an area other than a basement area is not considered a building's lowest floor; Provided, that such enclosure is not built so as to render the structure in violation of the applicable non-elevation design requirements of this ordinance.

Manufactured Home

A structure, transportable in one or more sections, which is built on a permanent chassis and is designed for use with or without a permanent foundation when connected to the required utilities. The term "manufactured home" does not include a "recreational vehicle".

New Construction

Structures for which the Start of Construction as herein defined commenced on or after November 18, 1988, and including any subsequent improvements to such structures.

One-Hundred (100) Year Flood

A flood that has one chance in one-hundred or a one percent chance of being equaled or exceeded in any given year.

Person

Any individual or group of individuals, corporation, partnership, association or other entity, including State and local governments and agencies.

Practice of Engineering

Any service or creative work, as described in WV state code Article 13, the adequate performance of which requires engineering education, training and experience in the application of special knowledge of the mathematical, physical and engineering sciences to such services or creative work as consultation, investigation, evaluation, planning and design of engineering works and systems; planning the use of land and water; teaching of advanced engineering subjects, engineering surveys and studies; and the review of construction for the purpose of assuring compliance with drawings and specifications any of which embraces such services or work, either public or private, in connection with any utilities, structures, buildings, machines, equipment, processes, work systems, projects and

industrial or consumer products or equipment of a mechanical, electrical, hydraulic, pneumatic or thermal nature, insofar as they involve safeguarding life, health or property, and including such other professional services as may be necessary to the planning, progress and completion of any engineering services. Engineering surveys include all survey activities required to support the sound conception, planning, design, construction, maintenance and operation of engineered projects.

Any person who practices any branch of the profession of engineering or who, by verbal claim, sign, advertisement, letterhead, card or in any other way represents himself or herself to be a registered professional engineer, or by using another title implies that he or she is a registered professional engineer or that he or she is registered under WV state code, article 13 or who holds himself or herself out as able to perform, or who performs any engineering service or work or any other service designated by the practitioner which is recognized as engineering, is considered to practice or offer to practice engineering within the meaning and intent of WV state code article 13.

Principally Above Ground

Where at least 51 percent of the actual cash value of a structure, less land value, is above ground.

Recreational Vehicle

A vehicle which is:

(a) built on a single chassis; (b) 400 square feet or less when measured at the largest horizontal projection; (c) designed to be self-propelled or permanently towable by a light duty truck; and (d) designed primarily not for use as a permanent dwelling but as temporary living quarters for recreational, camping, travel, or seasonal use.

Registered professional engineer

A person who has been duly registered or licensed as a registered professional engineer by the West Virginia state board of registration for professional engineers as required under WV state code article 13 et seq.

Remedy a Violation

To bring a structure or other development into compliance with the requirements of this ordinance, or, if full compliance is not possible, to reduce the adverse impacts of the non-compliance to the greatest extent feasible.

Reasonably Safe from Flooding

Means that during the base flood, water will not damage structures and any subsurface waters related to the base flood will not damage existing or proposed structures.

Start of Construction *(The definition for start of construction is to be used only when calculating the starting time for expiration of a permit.)*

The date the permit was issued, including permits for substantial improvement or repair of substantial damage, provided the actual start of construction, repair, reconstruction, rehabilitation, addition, placement, or other improvement was within 180 days of the permit date. The actual start means either the first placement of permanent construction on a site, such as the pouring of slab or footings, the installation of piles, the construction of columns, or any work beyond initial excavation, or the placement of a manufactured home on a foundation. Although a permit must be obtained prior to beginning, permanent construction does not include land preparation, such as clearing, grading and filling, nor does it include the installation of streets and/or walkways, nor does it include excavation for a basement, footings, piers or foundations or the erection of temporary forms, nor does it include the installation on the property of accessory buildings, such as garages or sheds not occupied as dwelling units or not part of the main structure. For an alteration, the actual start of construction means the first alteration of any wall, ceiling, floor or other structural part of a building, whether or not that alteration affects the external dimensions of the building.

State Coordinating Office

The West Virginia Division of Homeland Security and Emergency Management

Stream

As defined in WV State Code 7-1-3U, any watercourse, whether natural or man-made, distinguishable by banks and a bed, regardless of their size, through which water flows continually or intermittently, regardless of its volume.

Structure

A walled and roofed building, including a gas or liquid storage tank that is principally above ground, as well as a manufactured home.

Substantial Damage

Damage of any origin sustained by a structure whereby the cost of restoring the structure to its before damage condition would equal or exceed 50 percent of the market value of the structure before the damage occurred. Substantial damage also means cumulative flood-related damages sustained by a structure on two separate occasions during a 10 year period for which the cost of repairs at the time of each flood event equals or exceeds 25 percent of the market value of the structure before the damage occurred. See "Substantial Improvement."

Substantial Improvement

Any repair, reconstruction, rehabilitation, addition, or other improvement of a structure, the cost of which equals or exceeds 50 percent of the market value of the structure before the Start of Construction of the improvement.

This term includes structures, which have incurred "substantial damage", as defined herein regardless of the actual repair work performed. The term does not, however, include any project for improvement of a structure to correct existing violation of state or local health, sanitary or safety code specifications which have been identified by the local code enforcement official and which are the minimum necessary to assure safe living conditions.

Historic structures undergoing repair or rehabilitation that would constitute a substantial improvement as defined above, must comply with all ordinance requirements that do not preclude the structure's continued designation as a historic structure. Documentation that a specific ordinance requirement will cause removal of the structure from the National Register of Historic Places or the State Inventory of Historic places must be obtained from the Secretary of the Interior or the State Historic Preservation Officer. Any exemption from ordinance requirements will be the minimum necessary to preserve the historic character and design of the structure.

For the purpose of this definition improvement is considered to occur when the first alteration of any wall, ceiling, floor or other structural part of the building commences whether or not that alteration affects the external dimensions of the structure.

Top of Bank

The lines depicted on the FIRM maps delineating each side of a stream indicate the top of bank. In the field a professional familiar with fluvial geomorphology should document the top of bank. When a professional is not employed the top of the bank will be considered to be the top of the first significant slope landward of the waters edge when it is followed by at least 50 feet of relatively flat land.

Violation

The failure of any structure or development to be fully compliant with all requirements of this ordinance. A structure or other development without the elevation certificate, other certifications, or other evidence of compliance required by this ordinance is presumed to be in violation until such time as that documentation is provided.

ARTICLE III - ESTABLISHMENT OF THE FLOODPLAIN AREA

Section 3.1 Identification

A. The identified floodplain area shall be those areas of Berkeley County, which are subject to the one hundred (100) year flood, as shown on the Flood Insurance Rate Map (FIRM) and described in the Flood Insurance Study (FIS) prepared for Berkeley County by the Federal Emergency Management Agency (FEMA) dated July 7, 2009 or the most recent revision thereof.

B. The identified floodplain area shall also be those areas of Berkeley County which have been identified as flood hazard areas by Berkeley County by use of historic or other technical data and shown on Berkeley County "Local

Flood Hazards Map". These areas shall be designated as appropriate with the level of technical data described below and shall be managed accordingly.

Section 3.2 Descriptions of Floodplain Areas

The identified floodplain shall consist of the following four specific areas:

A. The Floodway area (F1) shall be those areas identified as such in the FIS and as shown on the floodway map or FIRM. The term shall also include floodway areas identified in other studies for the approximated area discussed in Section D Below.

   In floodplain areas for which no regulatory floodway has been designated, the regulatory floodway for small, single lot development not incorporating significant amounts of fill can, at the discretion of the community, be considered to be the channel of the stream and the adjacent land areas to a distance of one-half the width of the floodplain as measured from the top of the bank nearest the site to the upland limit of the 100 year floodplain boundary.

B. The Floodway Fringe area (F2) shall be those areas for which specific one hundred (100) year flood elevations have been provided in the FIS but which lie beyond the floodway area.

C. The AE Area without Floodway (F3) shall be those areas identified as an AE Zone on the FIRM included in the FIS prepared by FEMA for which 100-year flood elevations have been provided but no Floodway has been delineated.

D. The Approximated area (F4) shall be those areas identified as an A Zone on the FIRM or floodway map included in the FIS prepared by FEMA and for which no one hundred (100) year flood elevations have been provided. For these areas, elevation and floodway information from other Federal, State, or other acceptable source shall be used when available. Where other acceptable information is not available the Floodplain Administrator shall require the applicant to determine the elevation with hydrologic and hydraulic engineering or other techniques. When hydrologic and hydraulic analyses are required, they shall only be undertaken by a registered professional engineer who shall certify that the methods used correctly reflect currently accepted technical concepts. The resultant study shall include a cover letter, signed by the responsible professional, providing a statement of findings in basic terms. In addition, studies, analyses, computations, etc. shall be submitted in sufficient detail to allow a thorough technical review by the floodplain administrator.

Section 3.3 Changes in Designation of Area

A. The delineation of the identified floodplain area may be revised by the Berkeley County Planning Department where natural or man-made changes have occurred and/or more detailed studies conducted or undertaken by the U.S. Army Corps of Engineers, a River Basin Commission or other qualified agency or individual document the necessity for such changes. However,

prior to any such change, approval must be obtained from the Federal Insurance Administration (FIA).

B. The Floodplain Administrator may identify and regulate new flood hazard or ponding areas. These areas may be delineated using locally derived technical information such as flood of record, historic high water marks and/or topographic data.

Section 3.4 Elevations Prevail

A. If the lowest natural grade adjacent to proposed development within an identified flood hazard area is at or above the Base Flood Elevation specified in the Flood Insurance Study, the structure shall not be required to conform to the flood prevention design and construction standards or flood-related development codes in Article VI. Topographic data certified by a registered professional engineer or licensed professional surveyor shall be submitted in sufficient detail to allow a thorough review by the Floodplain Administrator. The applicant is advised to apply for a Letter of Map Amendment (LOMA) from FEMA to have the Special Flood Hazard Area designation removed from the parcel or structure.

B. If the lowest natural grade adjacent to proposed development is below the Base Flood Elevation specified in the Flood Insurance Study, the site shall be considered to be within the floodplain area and the proposed structure shall be required to conform to all appropriate provisions of this ordinance.

Section 3.5 Boundary Disputes

Should a dispute concerning any district boundary arise, an initial determination shall be made by the Floodplain Administrator and any party aggrieved by this decision may appeal to the Berkeley County Planning Commission. The burden of proof shall be on the appellant/applicant.

ARTICLE IV - UTILIZATION OF THE FLOODPLAIN AREA

Section 4.1 Floodway (F1)

1. Within any floodway area (F1), no encroachments, including fill, new construction, or other development shall be permitted. Substantial improvements and repair of substantial damage shall be permitted so long as the footprint of the structure is not increased and all other flood damage reduction requirements of this Ordinance are complied with.

Section 4.2 Floodway Fringe (F2) and Approximated Floodplain (F4)

A. In the Floodway Fringe (F2) and Approximated Floodplain (F4), any development and/or use of land shall be permitted provided that all such uses, activities and/or development shall be undertaken in strict compliance with the flood-proofing and related provisions contained herein and in all other applicable codes, ordinances and regulations.

I. In the Approximated Floodplain (F4) the Floodplain Manager shall review, or shall cause to be reviewed, all proposed development not covered by sub-section B below to ascertain the amount being invested and the specific flood risk at the building site and assign a "minimal, moderate or significant" risk level.

a. Development determined to represent a minimal risk and costing less than $10,000 shall be required to provide "Point on Boundary" elevation data and historic flood heights. The Floodplain Manager shall attempt to determine a height that will be reasonably safe from flooding using this elevation data. The Floodplain Manager shall enter the flood height in Section "G" of the Elevation Certificate. Any new or substantially improved structures permitted using this method (other than appurtenant structures) shall be required to have the lowest floor elevated at least three (3) feet above the highest adjacent grade even if the "point on boundary" or historic flood height data would indicate a lower flood elevation. If this method is not adequate to allow the Floodplain Manager to confidently determine the flood height or if the applicant is not satisfied with the height determined the applicant shall be required to utilize one of the alternate methods set forth below.

b. Development determined to represent a low to moderate risk and/or costing less than $50,000 shall provide the results of a Quick-2 engineering analysis or attempt to obtain a free Base Flood Elevation by submitting a Letter Of Map Amendment request to FEMA or obtain flood height data by using the USGS methodology set forth in the USGS water resources investigations report 87-4111. These semi-detailed methods will be used by the Floodplain Manager to determine a "Community Flood Elevation". The Floodplain Manager shall enter the "Community Flood Elevation" in Section "G" of the Elevation Certificate. If the applicant is not satisfied with the height determined the applicant shall be required to utilize the method set forth below.

c. Development determined to represent a high risk and/or costing more than $50,000 shall develop a Base Flood Elevation using a detailed engineering study method such as HEC-ras. This data shall be prepared and certified by a registered professional engineer, who shall certify that the methods used correctly reflect currently accepted technical concepts. The resultant study shall include a cover letter, signed by the responsible professional, providing a statement of findings in basic terms and a completed Elevation Certificate. In addition, studies, analyses, computations, etc. shall be submitted in sufficient detail to allow a thorough technical review by the Floodplain Manager. Base Flood Elevations determined using this method can be used to rate flood insurance, typically resulting in a reduced premium.

B. All subdivision proposals and other proposed new developments which are proposed to take place either fully or partially within the Approximated

Floodplain area (F4) and which are greater than ten (10) lots or two (2) acres, whichever is the lesser, shall include base flood elevation data.

1. This data may be available from an authoritative source, such as the U.S. Army Corps of Engineers, U.S. Geological Survey, Natural Resource Conservation Service or state and local water resource department.

2. If the required data is not available from other sources the applicant shall develop the technical data using detailed methodologies comparable to those contained in a Flood Insurance Study. This data shall be prepared and certified by a registered professional engineer, who shall certify that the methods used correctly reflect currently accepted technical concepts.

Section 4.3 AE area without floodway (F3)

Within any AE area without floodway, no new construction or development shall be allowed unless it is demonstrated that the cumulative effect of the proposed development, when combined with all other existing and anticipated development, will not increase the elevation of the 100-year flood more than one (1) foot at any point. This requirement can be satisfied by utilization of the floodway area where determined.

Section 4.4 Alteration or relocation of a stream

A. Whenever a developer intends to alter or relocate a stream within the Floodplain Area the developer shall notify in writing, by certified mail, the Berkeley County Floodplain Administrator, The State Coordinating Office, and any adjacent communities and property owners of all such intended activities prior to the alteration or relocation of the stream. Copies of all required notifications must be submitted to the Federal Insurance Administration. In addition prior to issuing the local permit the Floodplain Administrator shall require copies of all necessary permits from those governmental agencies from which Federal or State Law requires approval. Contact information for State and Federal permitting authorities as well as addresses for required notification of appropriate County, State & Federal government agencies are contained in the Berkeley County Stream Alteration administrative procedures.

B. The developer shall also assure Berkeley County in writing that the carrying capacity within the altered or relocated portion of the stream will be maintained. The Floodplain Administrator may require the applicant to demonstrate that the altered or relocated portion of stream will provide equal or greater conveyance than the original stream segment. If hydrologic and hydraulic analyses are required, they shall only be undertaken by professional engineers, who shall certify that the methods used correctly reflect currently accepted technical concepts. The resultant study shall include a cover letter, signed by the responsible professional, providing a statement of findings in basic terms. In addition, studies, analyses, computations, etc. shall be submitted in sufficient detail to allow a thorough technical review by the floodplain administrator.

C. Alteration of a stream includes placement of culverts, bridges or other stream crossings. The floodplain administrator may require the use of certain "best practice" techniques in the construction of bridges, culverts or stream crossings to prevent damage, loss of stream crossings and localized flooding caused by blockage. These techniques may include, but are not limited to, wing walls, trash grates or requiring openings to be of sufficient size to pass debris and/or anticipated future increases in flood heights.

D. All new and replacement bridges, culverts and other stream crossings shall adhere to the relevant anchoring requirements contained in this ordinance.

E. The developer is required to provide the community a legal agreement detailing all scheduled inspections and maintenance to be performed on altered or relocated watercourses including culverts, bridges and other stream crossings. It shall be the responsibility of the applicant to transfer this agreement to the new owner when the land associated with the watercourse alteration is transferred. A copy of all new agreements shall be provided to the floodplain administrator. Failure to transfer the agreement and provide a signed copy to the Floodplain Administrator shall subject the violator to the penalties set forth in Section 8.3 of this ordinance.

F. The applicant must submit any maps, computations or other material required by the Federal Emergency Management Agency (FEMA) to revise the Flood Insurance Study and/or Flood Insurance Rate Maps, when notified by the floodplain Administrator, and must pay any fees or other costs assessed by FEMA for this purpose.

ARTICLE V - CRITERIA FOR BUILDING AND SITE PLAN APPROVAL

Section 5.1 General

Permits are required in order to determine whether all new construction or substantial improvements are:

A. Located in an identified Floodplain, Floodway or other flood hazard area.

B. Designed (or modified) and adequately anchored to prevent flotation, collapse, or lateral movement of the structure resulting from hydrodynamic and hydrostatic loads, including the effects of buoyancy.

C. Constructed with material and utility equipment resistant to flood damage as outlined in FEMA Technical Bulletin 2-93 (FIA-TB-2) or the most recent revision thereof.

D. Constructed by methods and practices that minimize flood damage.

E. Constructed with electrical, heating, ventilation, plumbing and air conditioning equipment and other service facilities that are designed and/or located so as to prevent water from entering or accumulating within the components during conditions of flooding.

Section 5.2 Basic Format

The basic format of the permit shall follow the Berkeley County Engineering Department Building Permit Application as well as the following:

A. A standard site plan showing size and location of the proposed development as well as any existing buildings or structures. The site plan shall also show all adjacent roads and watercourses with direction of flow, the lowest adjacent grade to the proposed foundation and/or toe of fill, the Base Flood Elevation and the location of the floodway boundary when applicable.

B. An acknowledgement that the applicant agrees to pay any and all fees associated with the permitting process as set forth in Section 7.8 thereof.

Section 5.3 Elevation and Flood Proofing Information

All applicants are encouraged to exceed the minimum elevation requirements contained herein. Flood insurance rates can be lowered significantly by increasing the elevation of the lowest floor above the freeboard height required by this ordinance.

Depending on the type of structure involved, the following information shall also be included in the application for work within the Floodplain Area:

A. For structures to be elevated two feet above the Base Flood Elevation:

1. A plan showing the size of the proposed structure and its relation to the lot where it is to be constructed.

2. A determination of elevations of the Base Flood, existing ground, proposed finished ground and lowest floor, certified by a registered professional engineer or licensed professional surveyor.

3. Plans showing the method of elevating the proposed structure including details of proposed fills, pile structures, retaining walls, foundations, erosion protection measures, etc. When required by the Floodplain Administrator, a Registered Professional Engineer or Architect shall prepare these plans.

4. Plans showing the methods used to protect utilities (including sewer, water, telephone, electric, gas, etc.) from flooding to two feet above the Base Flood Elevation at the building site.

5. During the course of construction, as soon as the basic elements of the lowest floor are in place and before further vertical construction, the applicant shall check for error by obtaining elevation data completed by a registered professional engineer or licensed professional surveyor certifying the height of the lowest floor. If a mistake in elevation has been made this is the best time to correct the error.

6. A Non-conversion Agreement shall be signed by the applicant whenever the community determines that the area below the first floor could be converted to a non-conforming use (generally areas below base flood elevation with ceilings higher than 5 feet). This agreement shall state:

   (i) The area below Base Flood Elevation shall not be converted for use other than for parking, building access or for allowable storage as detailed in this ordinance.

   (ii) The applicant agrees to notify prospective buyers of the existence of the non-conversion agreement. It shall be the responsibility of the applicant to transfer the agreement at closing to the new owner via notarized signature, a copy of all new agreements shall be provided to the Floodplain Administrator. Failure to transfer the agreement and provide a signed copy to the Floodplain Administrator shall subject the violator to the penalties set forth in Section 8.3 of this ordinance.

B. For structures to be flood proofed to two feet above the Base Flood Elevation (nonresidential structures only):

   All applicants are encouraged to exceed the minimum flood proofing requirements contained herein. Flood insurance rates can be lowered significantly by increasing the level of flood proofing above the height required by this ordinance. In order to obtain an "elevation credited" flood insurance rate on dry flood proofed buildings, flood proofing must extend at least one foot above the Base Flood Elevation.

   1. Plans showing details of all flood proofing measures, prepared by a registered professional engineer, showing the size of the proposed structure and its relation to the lot where it is to be constructed.

   2. A determination of elevations of the Base Flood, existing ground, proposed finished ground, lowest floor, and flood proofing limits; certified by a registered professional engineer or licensed professional surveyor.

   3. A Flood proofing Certificate, FEMA 81-65, as revised by FEMA, shall be prepared by the registered professional engineer who prepared the plans in (1) above, stating the structure in question, together with attendant utility and sanitary facilities is designed so that:

      (i) The structure is water tight with walls substantially impermeable to the passage of water from the lowest structural element to two feet above the Base Flood Elevation.

      (ii) The structure will withstand the hydrostatic, hydrodynamic, buoyant, impact, and other forces resulting from the flood depths, velocities, pressures, and other factors associated with the Base Flood.

C. For structures constructed of flood resistant materials – used solely for parking of vehicles, or storage, (Appurtenant Structures only)

1. A site plan prepared by a licensed professional surveyor or others of demonstrated qualifications showing elevation of existing ground, proposed finished ground and lowest floor. The plan shall also show details of proposed flood resistant materials usage and the size of the proposed structure and its relation to the lot where it is to be constructed. The location of the floodway boundary shall be represented on the plan when a floodway is present on the site.

2. An elevation report or certificate, based on finished construction, must be prepared by a licensed professional surveyor or others of demonstrated qualifications. This certificate or report must confirm that the structure in question, together with attendant utilities is designed so that:

   (i) Flood resistant materials as detailed in FEMA Technical Bulletin 2-93 (FIA-TB-2) are used in the construction of the structure from the lowest structural element to two feet above the Base Flood Elevation and that all utilities are located at least two feet above the Base Flood Elevation.

   (ii) Hydrostatic flood forces on exterior walls are equalized by allowing for automatic entry and exit of floodwaters. Designs for meeting this requirement must either be certified by a Registered Professional Engineer or Architect or meet or exceed the following minimum criteria:

      a) A minimum of two openings having a total net area of not less than one square inch for every square foot of enclosed area subject to flooding shall be provided.

      b) The bottom of all openings shall be no higher than one foot above grade.

      c) Openings may be equipped with screens, louvers, valves or other coverings or devices provided that they permit the automatic entry and exit of floodwaters.

   (iii). In addition, the applicant shall sign a Non-conversion Agreement and notify prospective buyers of the existence of the agreement. It shall be the responsibility of the applicant to transfer the Non-conversion Agreement to any new owner at closing via notarized signature. A signed copy of the transferred Non-conversion agreement shall be provided to the floodplain administrator. Failure to transfer the agreement and provide a signed copy to the Floodplain Administrator shall subject the violator to the penalties set forth in Section 8.3 of this ordinance.

Section 5.4 Site Plan Criteria

The owner or developer of any proposed development, including Subdivisions and Manufactured Home Parks, shall submit a preliminary site plan to the Floodplain Administrator that includes the following information:

A. Name of registered professional engineer, licensed professional surveyor or other qualified person responsible for providing the information required in this section.

B. A map showing the location of the proposed subdivision and/or development with respect to floodplain areas, proposed lot sites, and fills. In addition, it is required that all subdivision proposals and other proposed new developments which are proposed to take place either fully or partially within the approximated floodplain (F4) and which are greater than ten (10) lots or two (2) acres, whichever is the lesser, shall include base flood elevation data and shall delineate a floodway. If FEMA has completed a Flood Insurance Study (FIS), that data must be used to substantiate the base flood. Otherwise, the developer may submit data provided by an authoritative source, such as U.S. Army Corps of Engineers, U.S. Geological Survey, Natural Resources Conservation Service, state and local water resource departments, or technical data developed using detailed methodologies comparable to those contained in a Flood Insurance Study. This data shall be prepared and certified by a registered professional engineer, who shall certify that the technical methods used correctly reflect currently accepted technical concepts.

C. Where the subdivision and/or development lies partially or completely in the floodplain areas, the plan map shall include detailed information giving the location and elevation of proposed roads, public utilities and building sites. All such maps shall also show contours at intervals of two (2) or five (5) feet depending upon the slope of the land and identify accurately the boundaries of the floodplain areas.

D. Where the subdivision lies partially in the floodplain area and all proposed development will take place on natural grade a significant vertical distance above the floodplain area, development of detailed Base Flood Elevation data may not be necessary. In these cases the site plan for the proposed development must show contours at intervals of two (2) or five (5) feet and clearly delineate the area to be developed and the location of the floodplain areas as depicted on the FEMA map. A registered professional engineer, licensed professional surveyor or others of demonstrated qualifications must certify the site plan.

Section 5.5 – Restrictions to Subdivision of land in floodplain areas.

Subdivision of land in the floodplain area must result in lots that include a buildable portion outside of the identified flood hazard area and be served by streets within the proposed subdivision having surfaces not lower than 1 foot below the elevation of the line defining the floodplain limits. All new structures must be sited on the portion of the subdivided lot that is located outside of the identified flood hazard area.

ARTICLE VI - SPECIFIC REQUIREMENTS

Section 6.1 Design and Construction Standards

In order to prevent excessive damage to buildings, structures, and related utilities and facilities, the following restrictions apply to all development, subdivision proposals, manufactured home parks, new construction and to construction of substantial improvements, and the repair of substantial damage, to existing structures occurring in the Floodplain Area.

A. Basements and Lowest Floors

1. Residential Structures - All new construction, relocation, substantial improvements, including repair of substantial damage, of residential structures must have the lowest floor, including basement, ductwork and utilities, elevated to two feet above the Base Flood Elevation.

2. Non-residential Structures - All new construction, relocation, substantial improvements, including repair of substantial damage, of nonresidential structures must have the lowest floor, including basement, ductwork and utilities, elevated to two feet above the Base Flood Elevation; or, together with attendant utility and sanitary facilities, be designed so that the structure is water tight with walls substantially impermeable to the passage of water from the lowest structural element to two feet above the Base Flood Elevation.

3. Openings - For all new construction, relocation, substantial improvements, and repair of substantial damage, those fully enclosed areas below the lowest floor that are usable solely for parking of vehicles, building access or storage in an area other than a basement and which are subject to flooding shall be designed to automatically equalize hydrostatic flood forces on exterior walls by allowing for entry and exit of floodwaters. Designs for meeting this requirement must either be certified by a Registered Professional Engineer or meet or exceed the following minimum criteria:

    a) A minimum of two openings having a total net area of not less than one square inch for every square foot of enclosed area subject to flooding shall be provided.
    b) The bottom of all openings shall be no higher than one foot above grade.
    c) Openings may be equipped with screens, louvers, valves, or other coverings or devices provided that they permit the automatic entry and exit of floodwaters.

B. Manufactured Home Placement

Certain unique characteristics of manufactured homes installed in flood hazard areas pose an elevated risk of substantial damage to property. Thus –

1. All manufactured homes to be sited within the identified flood hazard areas of Berkeley County shall be installed by a contractor possessing a valid

WV Manufactured Home Installer's license. The installer shall use an installation design engineered to withstand flood hazards specific to the particular home site. Manufactured homes to be placed or substantially improved within the flood hazard areas shall be installed in accordance with the following standards:

a. The lowest floor, ductwork and utilities including HVAC/heat pump shall be elevated two feet above the Base Flood Elevation

b. Elevation shall be on reinforced piers on a permanent foundation or other foundation elements of at least equivalent strength engineered for use in a flood hazard area. Installation designs incorporating dry stacked block piers shall not be used in flood hazard areas.

c. All manufactured homes shall be securely anchored to an adequately anchored foundation system in compliance with the requirements of 42 West Virginia Code of State Regulations, Series 19, Sections 10.1, 10.2, and 10b as authorized by West Virginia Code § 21-9-4. The anchoring shall be adequate to resist flotation, collapse, or lateral movement. Methods of anchoring may include but are not limited to the over-the-top and frame ties, attached to permanent foundation elements. Ground anchors may not be adequate to satisfy flood specific anchoring requirements. This requirement is in addition to applicable State and local anchoring requirements for resisting wind forces.

d. Permanently attached rigid skirts and perimeter wall skirts of brick or block must have openings; this type of skirting can collapse during floods and compromise supporting piers. The openings must be designed to automatically equalize hydrostatic flood forces by allowing for entry and exit of floodwaters. Designs for meeting this requirement must either be certified by a Registered Professional Engineer or meet or exceed the following minimum criteria:

    (i) A minimum of two openings having a total net area of not less than one square inch for every square foot of enclosed area subject to flooding shall be provided.
    (ii) The bottom of all openings shall be no higher than one foot above grade.
    (iii) Openings may be equipped with screens, louvers, valves, or other coverings or devices provided that they permit the automatic entry and exit of floodwaters.

e. Any additions to a manufactured home shall be similarly anchored and vented.

2. The Floodplain Administrator shall perform or shall cause to be performed a site inspection. The inspector shall certify in writing that the manufactured home has been installed to the standards set forth in this section.

C. Appurtenant Structures

1. Except as provided in subsection 2 below, appurtenant structures shall be located out of the floodplain area or elevated to two feet above the Base Flood Elevation.

2. Where appurtenant structures not connected to the principal structure are to be located on sites below the Base Flood Elevation, the following flood damage reduction provisions apply:

   a. Structures shall be no more than 600 square feet in size and valued at less than $10,000.00.

   b. Floors shall be at or above grade on at least one side.

   c. Structures shall be located, oriented and constructed to minimize flood damage.

   d. Structures shall be designed (or modified) and adequately anchored to prevent flotation, collapse, or lateral movement of the structure resulting from hydrodynamic and hydrostatic loads, including the effects of buoyancy.

   e. Flood resistant materials as detailed in FEMA Technical Bulletin 2-93 (FIA-TB-2) shall be used in the construction of the structure from the lowest structural element to two feet above the Base Flood Elevation.

   f. Machinery, electric devices or appliances, and all utilities shall be located at least two feet above the Base Flood Elevation.

   g. The venting requirements contained in Section 6.1 (A) are applicable and shall be strictly adhered to.

3. A Nonconversion Agreement shall be signed by the applicant stating that the use of the appurtenant structure or detached or attached garage shall not be changed from the use permitted, acknowledging that the structure may be subject to greater flood risk and that higher flood insurance premiums may be possible, and that a change in use may require full compliance with this ordinance. The applicant agrees to notify prospective buyers of the existence of this agreement. It shall be the responsibility of the applicant to transfer the agreement at closing to the new owner via notarized signature, a copy of all new agreements shall be provided to the floodplain administrator. Failure to transfer the agreement and provide a signed copy to the Floodplain Administrator shall subject the violator to the penalties set forth in Section 8.3 of this ordinance.

D. Recreational Vehicle Placement

1. Recreational vehicles to be placed within any floodplain area shall either:
   a. Be on site for fewer than 180 consecutive days. Or,

b. Be fully licensed and ready for highway use. A recreational vehicle is ready for highway use if it is on its wheels or jacking system, is attached to the site only by quick disconnect utilities and security devices, and has no permanently attached additions. Or,
c. Be installed in accordance with the Manufactured Home Placement requirements and all other flood reduction requirements contained in this ordinance.

E. Fill

Berkeley County officially recognizes the beneficial functions the floodplain serves in storage and transportation of water during floods. Placement of fill in the floodplain area is discouraged and should be minimized. No fill shall be permitted in the floodway.

Placement of fill in other areas of the floodplain is restricted to functional purposes such as elevating a structure. Fill shall only be permitted in the same permit with the related structure or other functional purpose. Placement of fill to dispose of spoil from excavation or to elevate yards, parking lots, or fields will not generally be considered a functional purpose. No fill shall be permitted in the identified floodplain area unless compensatory storage is provided immediately adjacent to the site. All fill placed in the floodplain area shall meet or exceed the following standards:

1. Fill shall be used only to the extent to which it does not adversely affect adjacent properties. Berkeley County may require the applicant to demonstrate through engineering reports that proposed fill would not adversely affect adjacent properties. When required, Hydrologic and hydraulic analyses shall be undertaken only by professional engineers who shall certify that the technical methods used correctly reflect currently accepted technical concepts. The resultant study shall include a cover letter, signed and sealed by the responsible professional, providing a statement of findings in basic terms. In addition, studies, analyses, computations, etc., shall be submitted in sufficient detail to allow a thorough technical review by Berkeley County Planning Commission/Engineering Department. During permit review the community shall consider the following issues that have the potential to cause adverse impact to adjacent properties:

    a. Unacceptable increases in flood heights.
    b. Blocking drainage from adjacent property.
    c. Deflection of floodwaters onto adjacent existing structures.
    d. Increases to stream velocity initiating or exacerbating erosion problems.
    e. Other unique site conditions may be considered when determining whether fill will cause adverse impact to adjacent property including, but not limited to, subsidence areas, karst topography, stream blockages, and steep topography adjacent to the channel.

2. Fill shall be used only to the extent to which it does not adversely affect the capacity of channels or floodways of any tributary to the main stream, drainage ditch, or any other drainage facility or system.

3. Filled site must be contoured to drain properly (avoid ponding)

4. Fill shall extend beyond a structure for a sufficient distance to provide acceptable access. For residential structures, fill shall extend laterally fifteen (15) feet beyond the building line from all points before the start of sloping required in following subsection. For nonresidential structures, fill shall be placed to provide access acceptable for intended use. At grade access, with fill extending laterally fifteen (15) feet beyond the building line shall be provided to a minimum of twenty-five (25) percent of the perimeter of a nonresidential structure.

5. Fill shall consist of soil or rock material only. Sanitary landfills shall not be permitted, no trash or woody debris shall be buried on site.

6. Fill material shall be compacted to provide the necessary stability and resistance to erosion, scouring or settling. Fill compaction standards must be appropriate to proposed post fill use, particular attention is necessary when fill is being used to elevate a structure.

7. Fill slopes shall be no steeper than one (1) vertical on two (2) horizontal, unless substantiating data justifying steeper slopes are submitted to and approved by the Floodplain Administrator.

8. Fill site and fill must be protected from erosion.

    a. Fill slopes exposed to flood waters with expected velocities during the occurrence of the base flood of five feet per second or less must be protected from erosion by covering them with grass, vines, weeds, or similar vegetative undergrowth.

    b. Fill slopes exposed to flood waters with expected velocities during the occurrence of the base flood of greater than five feet per second must be protected from erosion by armoring them with stone or rock slope protection.

9. All applicants placing fill in a mapped flood hazard area must obtain a Conditional Letter of Map Revision (CLOMR) from FEMA when directed to do so by the Floodplain Administrator before a permit can be issued. After fill is finished the applicant must convert the CLOMR to a Letter of Map Revision based on Fill (LOMR-F) before a certificate of occupancy can be issued.

10. The applicant must submit any maps, computations or other material required by the Federal Emergency Management Agency (FEMA) to revise the Flood Insurance Study and/or Flood Insurance Rate Maps, when notified by the Floodplain Administrator, and must pay any fees or other costs assessed by FEMA for this purpose.

F. Placement of Structures

1. All buildings and structures shall be constructed and placed on the lot so as to offer the minimum obstruction to the flow of water and shall be

designed to have a minimum obstruction effect upon the flow and height of floodwater.

i. Whenever possible, structures shall be constructed with the longitudinal axis parallel to the direction of flood flow and,

ii. So far as practicable, structures shall be placed approximately on the same flood-flow lines as those of adjoining structures.

G. Anchoring

1. All buildings and structures including stream crossings shall be firmly anchored in accordance with accepted engineering practices to prevent flotation, collapse, and lateral movement, thus reducing the threat to life and property and decreasing the possibility of the blockage of bridge openings and other restricted sections of the watercourse.

2. All air ducts, large pipes, and storage tanks located at or below the Base Flood Elevation shall be firmly anchored to resist flotation.

H. Flood Protection Setback

1. A Flood Protection Setback equal to twice the width of the watercourse channel measuring from the top of one bank to the top of the opposite bank or 50 feet, whichever is less, shall be maintained from the top of the banks of all watercourses. To reduce erosion, natural vegetation shall be maintained in this area. Where natural vegetation does not exist along the watercourse and conditions for replanting are suitable, high priority shall be given to planting vegetation in the setback area to stabilize banks and enhance aquatic resources.

2. Necessary public works and temporary construction may be exempted from this subsection.

3. The Floodplain Administrator may consider an appeal to the Flood Protection Setback requirement if the applicant demonstrates that it is impossible to allow any development without encroachment into the Flood Protection Setback area. The appeal conditions shall be the minimum necessary and shall be made only after due consideration is given to varying other siting standards, such as side, front and back lot line setbacks.

I. Storage

1. No materials that are buoyant, flammable, explosive, or in times of flooding could be injurious to human, animal or plant life, shall be stored below Base Flood Elevation.

2. Storage of other material or equipment may be allowed if not subject to major damage by floods and firmly anchored to prevent flotation or readily removable from the area within the time available after flood warning.

3. Due to the potential of masking the natural elevation and making it more difficult to enforce this ordinance, material that resembles "fill" material shall not be considered "storage" material for purposes of this subsection.

J. Utility and Facility Requirements

A. All new or replacement water systems whether public or private, shall be designed to minimize or eliminate infiltration of floodwaters into the systems.

B. All new or replacement sanitary disposal systems, whether public or private, shall be designed to minimize or eliminate infiltration of floodwaters into the systems and discharges from the systems into floodwaters.

C. All other new or replacement public and/or private utilities and facilities shall be located and constructed to minimize or eliminate flood damage.

D. Onsite waste disposal systems shall be located to avoid impairment to them or contamination from them during flooding.

K. Drainage

Adequate drainage shall be provided to reduce exposure to flood hazard.

L. Backflow Preventers

Back flow prevention valves should be used for all enclosed structures with sewage or drainage facilities located in the floodplain.

ARTICLE VII - ADMINISTRATION

Designation of Floodplain Administrator

The Berkeley County Planning Director is hereby appointed as Floodplain administrator to administer and implement this local law by granting or denying floodplain development permits in accordance with its provisions.

Section 7.1 Development Permits and Site Plan Approvals Required

It shall be unlawful for any contractor, person, partnership, business, or corporation to undertake or cause to be undertaken, any development or the new construction, substantial improvement, repair of substantial damage, the placement or relocation of any structure (including manufactured homes) within Berkeley County, unless a permit application and standard site plan has been completed, and a permit has been obtained from the Floodplain Administrator. In addition, where land that is either partially or fully in the regulatory floodplain is to be subdivided, utilized for a manufactured home park or subdivision or otherwise developed, a detailed site plan must be submitted to, and approved by, the Floodplain Administrator prior to any development.

Section 7.2 Approval of Permits and Plans

1. The Floodplain Administrator shall review, or shall cause to be reviewed; all permits applications and plans in order to determine whether proposed building sites are reasonable safe from flooding.

2. All permits and plans shall be approved only after it has been determined that the proposed work to be undertaken will be in conformance with the requirements of the state and all other applicable codes and ordinances.

3. The Floodplain Administrator shall not issue a permit to any person who does not possess a valid contractor's license when a contractor's license is required by West Virginia State Code §21-11-10.

4. The Floodplain Administrator, before issuance of the permit, shall require the applicant to furnish satisfactory proof that such person is duly licensed as a contractor under the provisions of West Virginia State Code. If the applicant is not licensed a written affidavit that such person is not subject to licensure as a contractor or subcontractor as defined in §21-11-3 shall be provided to the Floodplain Administrator and placed in the permit file.

5. The Floodplain Administrator shall require copies of all necessary permits from those governmental agencies from which Federal or State Law requires approval.

6. The Floodplain Administrator shall provide a copy of all permits to the County Assessor as required by West Virginia State Code 11-3-3A.

7. The Floodplain Administrator shall provide a copy of all permits for new structures to the County E-911 addressing coordinator.

8. The County E-911 addressing coordinator shall provide a copy of all requests for addresses for new structures to the County Floodplain Administrator.

9. Berkeley County shall provide sufficient space to allow the Floodplain Administrator to keep on file in perpetuity, in a location safe from natural hazards, all information collected during the course of the administration of this ordinance.

Section 7.3 Application Procedures

Application for a permit and/or site plan approvals shall be made, in writing, on the forms supplied by the Berkeley County Planning Commission, and shall include all information stipulated under Article V of this Ordinance.

Section 7.4 Start of Construction

Work on the proposed development shall begin within 180 days after the date of issuance of the permit or the permit shall expire unless a time extension is granted, in writing, by the Floodplain Administrator. All work on the proposed

development must be completed within 18 months of permit issuance, at which time the permit shall expire, unless a time extension is granted in writing by the Floodplain Administrator. The request for a time extension shall be in writing and shall state the reasons for the extension. When considering an extension, the Floodplain Administrator shall consider the following criteria:

1) Has the developer diligently pursued the completion of the proposed development during the 18 months?
2) Will the granting of the extension be detrimental to public safety, health, or welfare or injurious to other property?

Section 7.5 Changes

After the issuance of a permit or site plan approval by the Floodplain Administrator, no changes of any kind shall be made to the application, permit, or any of the plans, specification or other documents submitted with the application without the written consent or approval of the Floodplain Administrator.

Section 7.6 Permit Placards

A. The Floodplain Administrator/Berkeley County Engineer shall issue a permit placard, which shall be prominently displayed on the premises during the time construction is in progress. This placard shall show the number of the permit, the date of its issuance and be signed by the Floodplain Administrator/Berkeley County Engineer.

B. Inspections and Revocations

A. During the construction period, the Floodplain Administrator or other authorized official may inspect the premises to determine that the work is progressing in compliance with the information provided on the permit application and with all applicable laws and ordinances.

B. If the Floodplain Administrator discovers that the work does not comply with the permit application or any applicable laws and ordinances or that there has been false statement or misrepresentation by any applicant, the Floodplain Administrator shall issue a "Stop Work Order Notice" revoke the permit and request a temporary injunction.

C. The Floodplain Administrator or other authorized official may inspect any development covered by this or previous ordinance to determine whether any portion of the development has been altered to be in non-compliance with the requirements of this ordinance.

Section 7.7 Stop Work Orders, Inspections and Revocations

A. Stop-Work Orders

1. The Floodplain Administrator shall issue, or cause to be issued, a "Stop Work Order Notice" for any development found ongoing without having

obtained a permit. Disregard of a stop work order shall subject the violator to the penalties described in Section 8.3 of this local law.

2. The Floodplain Administrator shall issue, or cause to be issued, a "Stop Work Order Notice" for any development found non-compliant with the provisions of this law and/or the conditions of the permit. Disregard of a stop work order shall subject the violator to the penalties described in Section 8.3 of this local law.

Section 7.8 Fees

A. A Floodplain Determination fee of $20.00, payable to the Berkeley County Planning Commission shall be assessed on all proposed development. These fees are in addition to any other fees that may be charged.

B. Application for a permit for proposed development determined to be occurring in a flood hazard area regulated by this ordinance shall be accompanied by an additional fee, payable to Berkeley County Planning Commission, based upon the estimated value of the proposed construction as determined by the Floodplain Administrator at the following rates:

Type of Development	Fee
Minor Subdivision Review	$50.00
Major Subdivision/Land Development Unit Review	$500.00
Conveyance Structures located within Floodplain Review	$500.00

C. In addition, the applicant shall be responsible for reimbursing the Berkeley County Planning Commission for any additional costs for services necessary for review and/or inspection of proposed development. Services include, but are not limited to, professional engineering and surveying. The Floodplain Administrator may require a deposit towards these additional costs. Additional costs may include reimbursement for contracted services.

D. Due to the increased cost of processing, when any work for which a permit is required by this ordinance is started or proceeded with prior to obtaining a permit the fees above specified shall be doubled. The additional fee is intended to partially reimburse the County for the additional cost of processing permits for work already underway. To more fully recover this cost the fees above shall be tripled for every subsequent occurrence by the same person. Payment of the increased fee shall not relieve any person from complying fully with the requirements of this ordinance in the execution of the work or from other penalties prescribed herein.

ARTICLE VIII - APPEALS AND PENALTIES

Section 8.1 Appeals

1. Whenever any person is aggrieved by a decision of the Floodplain Administrator with respect to the provision of this ordinance, it is the right of that person to appeal to the Berkeley County Planning Commission which shall be

known as the Appeals Board. Such appeal must be filed with the Berkeley County Planning Commission, in writing, within thirty (30) days after notification of the decision. Upon receipt of such appeal, the Appeals Board shall set a time and place not less than fourteen (14) nor more than sixty (60) days for the purpose of hearing the appeal. Notice of the time and place of the hearing shall be given to all parties at which time they may appear and be heard. The determination by the Appeals Board shall be final in all cases.

Section 8.2 Appeal Review Criteria

A. All appeals contesting only the permit fee, the cumulative substantial damage requirement, the flood protection setback requirement, or the freeboard requirements, may be handled at the discretion of the Appeals Board.

B. All decisions on appeals to all other provisions of this ordinance shall adhere to the following criteria:

1. Affirmative decisions shall only be issued by the Appeals Board upon (i) a showing of good and sufficient cause, (ii) a determination that failure to grant the appeal would result in exceptional hardship to the applicant, and (iii) a determination that the granting of an appeal will not result in increased flood heights, additional threats to public safety, extraordinary public expense, create nuisances, cause fraud on or victimization of the public or conflict with existing locals laws or ordinance.

2. An affirmative decision shall be issued only upon determination that it is the minimum necessary, considering the flood hazard, to afford relief. Financial hardship, as a sole criterion, shall not be considered sufficient justification to grant an appeal.

3. An affirmative decision shall be issued for the repair or rehabilitation of historic structures upon a determination that the proposed repair or rehabilitation will not preclude the structure's continued designation as a historic structure and the variance is the minimum necessary to preserve the historic character and design of the structure.

4. The Appeals Board shall notify the applicant in writing over the signature of a community official that (i) the issuance of a decision to allow construction of a structure below the Base Flood Elevation will result in increased premium rates for flood insurance, (ii) such construction below the Base Flood Elevation increases risk to life and property. Such notifications shall be maintained with a record of all decisions as required in paragraph (4) of this section; and

5. The Appeals Board shall (i) maintain a record of all decisions including justification for their issuance, and (ii) report such decisions issued in its biannual report to the Federal Insurance Administration.

6. An affirmative decision shall not be granted for any construction, development, use or activity within any floodway area that would cause any increase in the Base Flood Elevation.

Section 8.3 Penalties

Any person who fails to comply with any or all of the requirements or provisions of this ordinance or direction of the Floodplain Administrator, or any other authorized employee of the community, shall be unlawful and shall be referred to the Prosecuting Attorney who shall expeditiously prosecute all such violators. A violator shall, upon conviction, pay a fine to the Berkeley County Commission of not less than fifty dollars ($50.00) or more than five hundred dollars ($500.00) plus cost of prosecution. In default of such payment such person shall be imprisoned for a period not to exceed 10 days. Each day during which any violation of this ordinance continues shall constitute a separate offense. In addition to the above penalties, all other actions are hereby reserved including an action in equity for the proper enforcement of this ordinance. The imposition of a fine or penalty for any violation of, or non-compliance with, this ordinance shall not excuse the violation or non-compliance with the ordinance or permit it to continue; and all such persons shall be required to correct or remedy such violations or non-compliance within a reasonable time. Any structure constructed, reconstructed, enlarged, altered or relocated in non-compliance with this ordinance may be declared by Berkeley County to be a public nuisance and abatable as such.

ARTICLE IX – GOVERNMENT ACTIONS

Section 9.1 – Municipal Annexation

A. The County floodplain ordinance in effect on the date of annexation shall remain in effect and shall be enforced by the municipality for all annexed areas until the municipality adopts and enforces an ordinance which meets the requirements for participation in the National Flood Insurance Program.

B. Municipalities with existing floodplain ordinances shall pass a resolution acknowledging and accepting responsibility for enforcing floodplain ordinance standards prior to annexation of any area containing identified flood hazards.

C. All plats or maps of annexation shall show the floodplain boundaries, Base Flood Elevation and location of the floodway where determined.

D. In accordance with the Code of Federal Regulations, Title 44 Subpart (B) Section 59.22 (a) (9) (v) all NFIP participating communities must notify the Federal Insurance Administration in writing whenever the boundaries of the community have been modified by annexation or the community has otherwise assumed or no longer has authority to adopt and enforce flood plain management regulations for a particular area. In order that all Flood Insurance Rate Maps accurately represent the community's boundaries, a copy of a map of the community suitable for reproduction, clearly delineating the new corporate limits or new area for which the community has assumed or relinquished flood plain management regulatory authority must be included with the notification.

E. NFIP participating communities must notify the State Coordinating Office in writing whenever the boundaries of the community have been modified by annexation or the community has otherwise assumed or no longer has authority to adopt and enforce flood plain management regulations for a particular area. A copy of a map of the community suitable for reproduction,

clearly delineating the new corporate limits or new area for which the community has assumed or relinquished flood plain management regulatory authority must be included with the notification.

Section 9.2 – Permits for Government Entities.

A. Unless specifically exempted by law, all public utilities and Municipal, County, State and Federal entities are required to comply with this ordinance and obtain all necessary permits. Any entity claiming to be exempt from the requirements of this ordinance must provide a written statement setting forth the rationale for exemption. In addition the entity claiming exemption shall provide copies of all relevant legal documentation demonstrating the exemption.

ARTICLE X - SEVERABILITY AND MUNICIPAL LIABILITY

Section 10.1 Severability

If any section, subsection, paragraph, sentence, clause, or phrase of this ordinance shall be declared invalid for any reason whatever, such decision shall not affect the remaining portions of this ordinance which shall remain in full force and effect and for this purpose the provisions of this ordinance are hereby declared to be severable.

Section 10.2 Liability

The granting of a permit or approval of a subdivision or development plan in an identified flood-prone area, shall not constitute a representation, guarantee, or warranty of any kind by Berkeley County or by any official or employee thereof of the practicability or safety of the proposed use, and shall create no liability upon Berkeley County. All applicants proposing development in or near a flood hazard area are urged to locate development as far away from, and as high above, all flooding sources as possible.

BERKELEY COUNTY PLANNING COMMISSION
400 West Stephen Street - Suite 203, Martinsburg, WV 25401-3838
Telephone: 304/264-1963, Fax: 304/262-3127
Web Page: [illegible]

ADOPTED The 11th day of June, 2009. Amended by vote of the Commission on Thursday, June 11, 2009. Ordinance with amendments effective July 1, 2009.

The County Commission of Berkeley County

Ronald K. Collins, President

William L. Stubblefield, Commissioner

Anthony J. Petrucci, Commissioner

ATTEST: _____
John W. Small, Jr., County Clerk

DATE: June 11, 2009

RECORDED DATE: June 11, 2009

BERKELEY COUNTY, WV
FILED
June 11, 2009 15:02:13
JOHN W. SMALL JR.
COUNTY CLERK
TRANSACTION NO: 2009031202
BOOK OF DEEDS
Book: 00929 Page: 00334

Appendix G

Development Review Fee Schedule

PLEASE MAKE CHECK(S) PAYABLE TO BERKELEY COUNTY PLANNING DEPARTMENT AND IF FEES ARE REQUIRED FOR ENGINEERING A SEPARATE CHECK SHOULD BE PROVIDED PAYABLE TO THE BERKELEY COUNTY COUNCIL

Requested Service	Fee
Miscellaneous	
Subdivision Regulations (paper copy)	$25.00
Comprehensive Plan (paper copy)	$35.00
CD Copies (S/D Regs, Comp Plan, PC Minutes Other)	$5.00
Copies	$0.50 / $1.00 color
Aerial Photos	$25.00
Aerial Photos Special Order	$35.00
Ortho Photo Layer	$50.00
Research Requests	$20.00 per request

Public Hearing Fee**	**$110.00 + sign inspection fee**
Public Hearing Sign Inspection**	**$75.00**
Waiver	**$345.00 ($160 waiver + $110 public hearing fee + $75 sign inspection)**

Minor Subdivision

Merger, Family-Transfer, Testimonials,	**$275.00 + $75.00 per parcel (parcel includes: lots, tracts, residues and all affected property)**
Plat of Right-of-Way, Boundary Line Adjustment	
Re-survey, Easement	**$125.00**

Major Subdivisions

NOTE: The fees established for Major Subdivisions include the First Three Reviews, After which a review fee of $1,000.00 ($500.00 for Planning and $500.00 for Engineering) will be assessed for each review.

Sketch Plan	**$185.00 (public hearing fees)**
Preliminary Plat (1-49 lots)*	**$600.00 Base + $200.00 per lot for planning review + $200.00 per lot for engineering review + (public hearing fees (**) if required**

Preliminary Plat (50 lots and above) +	**$1,100 Base + $200.00 per lot for planning review + $200.00 per lots (1-49) + $150.00 per lot (50 and above) for engineering review+ (public hearing fees (**) if required**
Plan Change	**$600.00 + $185.00 (public hearing)**
Plan Change (Administrative)	**$600.00**
Commercial	**$1,000.00 ($500.00 payable to Planning Department and $500.00 payable to the Engineering Department)**
Preliminary Plat Extensions	**$300.00 per extension for plan of 1-49 lots** **$600.00 per extension for plans over 50 lots**
Final Plat (1-49 lots)	**$300.00 payable to Planning Department + $150.00 payable to Engineering Department + public hearing fees (**) if required**
Final Plat (50 lots and above)	**$600.00 payable to Planning Department + $300.00 payable to the Engineering Department + public hearing fees (**) if required**
Final Plat Extensions	**$300.00 for plan of 1-49 lots** **$600.00 for plans over 50 lots**

Supplemental Plat/Land Development Unit	**$300.00 Engineering + $150.00 Planning**
Preliminary/Final Plat	**$300.00 Planning + $150.00 Engineering**
Commercial Land Development Unit	**$500.00 Planning Base Fee + $150.00 per acre or fraction thereof + $500.00 Engineering Base Fee + $150.00 per acre or fraction thereof**
Bond Reductions/Releases	**After the three reductions $100.00 Planning fee + $250.00 Engineering Fee**

Hydrogeologic/Karst

Submission Review	**$750.00**
Field Check	**$575.00**
Letter Report	**$500.00**

Appendix H

AGREEMENT REGARDING BONDING OBLIGATIONS AND

DECLARATION OF COVENANT, CONDITIONS AND RESTRICTIONS

Subdivision name

THIS AGREEMENT REGARDING BONDING OBLIGATIONS AND DECLARATION OF COVENANTS, CONDITIONS AND RESTRICTIONS (this "Declaration") is made and entered into this the day of 20xx, by developer name (hereafter "Declarant"), and the **PLANNING COMMISSION OF BERKELEY COUNTY, WEST VIRGINIA** (hereafter the "Planning Commission").

WHEREAS, Declarant is the owner of a certain tract of land in Berkeley County, West Virginia, legally described in the deed found recorded in the Berkeley County Clerk's Office in Deed Book xxx, Page xxx (the "Land"); and

WHEREAS, the Land has been legally subdivided (the "Subdivision") into xxxxx Subdivision consisting of (xxx) single family, (xxx) townhouse, (xxx) other residential lots (the "Lots") pursuant to and in accordance with the subdivision ordinance of Berkeley County, West Virginia in effect at the time of approval, as amended (the "Subdivision Ordinance"), and shown on that certain plat of the xxxx subdivision, Lots xx-xx, recorded in the Office of the County Clerk for Berkeley County, West Virginia, in Plat Book xx at Page xx (the "Final Plat"); and

WHEREAS, Declarant posted a surety with the Planning Commission, in the form of a letter of credit, bond or cash escrow in the amount of $xxxxxxxxx (the "Existing Infrastructure Bond") to secure the completion of all public infrastructure improvements to be made in connection with the development of the (Subdivision name) (the "Infrastructure Improvements") as itemized on the Construction Bond – Estimate, dated (date) (the "Bond Estimate"), and approved by the Berkeley County Engineering Department (the "Department") on (date); and

WHEREAS, due to the economic conditions of the home building industry, the Declarant has decided to delay construction of the Infrastructure Improvements and accordingly, has requested that the Planning Commission modify the Declarant's original bonding obligations with respect to the Subdivision (the "Original Bonding Obligations") until such time as the Declarant commences construction of the Infrastructure Improvements; and

WHEREAS, the Planning Commission hereby finds that it is in the best interests of Berkeley County to modify the Original Bonding Obligations until such time as the Declarant commences construction of the Infrastructure Improvements subject to the condition that Declarant execute and record this Declaration which shall run with the Land and be enforceable by the Planning Commission.

NOW, THEREFORE, in consideration of the premises and the covenants and agreements hereinafter set forth, Declarant declares the following:

1. **Incorporation of Recitals; Defined Terms.** The foregoing recitals are hereby incorporated into this Declaration by this reference as if fully set forth herein.

   Capitalized terms not defined or cross-referenced herein shall have the meanings ascribed to such terms in the Subdivision Ordinance.

2. **Modification of Original Bonding Obligations.**

   (a) The Planning Commission's agreement to modify the Original Bonding Obligations are subject to the satisfaction of the following conditions precedent (the "Modification Conditions"):

   (i) The Declarant submits to the Department a surety in the amount of $10,000.00 for the purpose of assuring site stability.

   (ii) The Declarant submits to the Department a merger deed for all of the property in question merging the property's subdivided lots into its original configuration prior to the recording of the subdivision.

   (b) Upon satisfaction of the Modification Conditions, the Planning Commission shall release the Existing Infrastructure Bond and return it to the Declarant and the Original Bonding Obligation shall thereafter be deemed modified as follows:

   (i) Unless and until Declarant commences the construction of any Infrastructure Improvement, the Declarant's bonding obligations with respect to the Subdivision are limited to posting and maintaining a $10,000 surety to assure site stability; provided, however, that no infrastructure improvements shall be required to be made to the Land as a condition of keeping such surety in place.

(ii) No Infrastructure Improvements, including without limitation any Site Stability Work, shall occur or be permitted on the Land (other than the continuance of any agricultural use existing on the land immediately prior to execution of this agreement, and/or mowing and other routine maintenance required to preserve the appearance of the Land and the health and safety of the community) unless and until the Declarant submits to the Department, and the Department approves, a new cost estimate for all Infrastructure Improvements, and the Declarant posts an approved surety with the Planning Commission in the amount of 115% of said estimate in accordance with the Bonding Policy (the "New Infrastructure Bond"). Upon posting the New Infrastructure Bond or similar surety, and provided the Declarant is not then in default under this Declaration, the Planning Commission shall return the surety for site stability to the Declarant.

(iii) Once the New Infrastructure Bond/Surety has been posted with the Planning Commission, the Planning Commission shall hold the New Infrastructure Bond/Surety in accordance with the Bonding Policy and the subdivision regulations. Declarant shall thereafter comply with all provisions of the Bonding requirements and may commence construction of required infrastructure pursuant to the approved final plan.

(3) Covenant Not to Commence Construction. In consideration of the Planning Commission's agreement to modify the Original Bonding Obligations, Declarant covenants and agrees that prior to satisfying the conditions set forth in Section 2(b)(ii) above, Declarant shall not commence, or cause any third party to commence, the construction of any Infrastructure Improvements, including without limitation any Site Stability Work.

(4) Covenant Prohibiting Construction of Homes or Sale or Transfer of Lots. In consideration of the Planning Commission's agreement to modify the Original Bonding Obligations, Declarant covenants and agrees that prior to satisfying the conditions set forth in Section 2(b)(ii) above, (a) Declarant shall not commence , or cause a third party to commence, the construction of any single or multi- family residence or other structure on any portion of the Land, and (b) Declarant shall not sell or transfer any Lot. Notwithstanding the foregoing, Declarant may transfer the entire Subdivision to a single transferee subject to the terms and provisions of this Declaration; provided, that such transferee expressly assumes the obligations of the Declarant memorialized by written agreement with the Planning Commission.

(5)Covenant to Maintain "Good Standing" with the State of West Virginia and Berkeley County. In consideration of the Planning Commission's agreement to modify the Original Bonding Obligations, Declarant covenants and agrees that at the time of submission of the Site Stability Surety, Declarant must be in "good standing" with the State of West Virginia and Berkeley County with regard to this parcel/property. This shall include:

(a) Maintaining any necessary and required current and valid organization/business certificate, license or any other document required by the West Virginia Secretary of State or the State Department of Revenue to conduct business in the State of West Virginia. The Declarant shall be in default of this agreement if at any time during the term of this agreement the organization/business is dissolved, suspended or revoked by the West Virginia Secretary of State or by the Department of Revenue and its good standing is allowed to lapse; and

(b) Not be delinquent on the real property taxes applicable to the subject property by more than 30 calendar days from the first payment due date set by law. The Declarant shall be in default of this agreement if at any time during the term of this agreement, the real property taxes on this property are delinquent more than 30 calendar days.

The Declarant shall provide the Planning Commission, on the annual anniversary date of this agreement, documentation evidencing that the Declarant has maintained, during the preceding year, good standing with the State of West Virginia and Berkeley County.

(6) Default

(a) The failure of the Declarant to observe or perform any of the covenants, conditions or obligations of this Declaration shall constitute a default under this Declaration. If Declarant fails to cure any default within thirty (30) days after the issuance of a notice by the Planning Commission, specifying the nature of the default, the Planning Commission may exercise any rights and remedies it may have hereunder or pursuant to applicable law, and may record the merger deed in the land records of the County Clerk of Berkeley County. Notwithstanding the foregoing, Declarant shall not be entitled to any notice of a violation of the covenant not to sell or transfer any Lot under Section 4(b) of this Declaration.

(b) The Planning Commission shall have the right to bring proceedings at law or in equity against the Declarant for violating or attempting to violate or defaulting upon any provisions contained in this Declaration and Agreement, and to recover actual damages for any such violation or default. Such proceeding shall include the right to restrain by injunction any violation or threatened violation by the Declarant or any other person of any of the terms, covenants or conditions of this Declaration, or to obtain a judicial order to compel performance of any such terms, covenants or conditions. All of the remedies permitted or available to the Planning Commission under this Declaration or at law or in equity shall be cumulative and not alternative, and the invocation of any such right or remedy shall not constitute a waiver or election of remedies with respect to any other permitted or available right or remedy. In any action brought by the Planning Commission pursuant to these provisions, the Planning Commission shall be entitled to costs, including but not limited to attorney's fees. In addition, the Planning Commission shall have the right to draw on the Site Stability Surety and apply the proceeds thereof in accordance with the Bonding Policy and applicable law and regulation.

(c) The maximum length of time for tolling the bond shall be four (4) years, except the applicant may apply for a one-time extension not to exceed two additional years. At the time of executing this agreement, the Declarant shall execute a merger deed that merges the lots back into the parent track as though the approved plan of subdivision had never occurred. The merger deed shall be held by the Planning Commission. If the Declarant fails to post a New Infrastructure Bond or other surety within four years of the date of this agreement or within the term of any extension of this agreement, the Planning Commission may record the merger deed and revoke all project approvals; and the $10,000 surety for site stability shall be forfeited to the Planning Commission. The merger deed may not be recorded by the Planning Commission if the Declarant posts the New Infrastructure Bond or similar surety prior to the expiration of the original or extended tolling period. In such case, the merger deed shall be returned by the Planning Commission to the Declarant. In the event of recordation of the merger deed, the parent tract and residue parcel shall retain all development rights under the land development ordinances in effect at the time any future application for land development is presented to the County.

(7) Waiver. No waiver by the Planning Commission of any default under this Declaration shall be effective or binding unless made in writing by the

Planning Commission and no such waiver shall be implied from any failure of the Planning Commission to take any action with respect to any default or violation.

(8) Binding Effect. The terms of this Declaration shall constitute covenants running with the land and shall bind the Land described herein and inure to the benefit of and be binding upon the Declarant and all parties having any right, title or interest in the Land (or any part thereof), their heirs, successors, successors-in-title and assigns. This Declaration is not intended to supersede, modify, amend or otherwise change the provisions of any instrument affecting the land burden hereby.

(9) Amendment of Declaration. This Declaration may not be amended except by a written agreement executed by the Declarant and the Planning Commission and recorded in the Office of the Clerk of the County Council of Berkeley County, West Virginia.

(10) Declaration Shall Continue Notwithstanding Breach. It is expressly agreed that no breach of this Declaration shall entitle the Declarant to cancel, rescind, or otherwise terminate this Declaration.

(11) Term of this Declaration. This Declaration shall be effective as of the date first above written and shall continue in full force and effect until the Declarant satisfies the conditions set forth in Section 2(b) (ii) above. Upon the termination of this Declaration, all rights and privileges derived from and all duties and obligations created and imposed by the provisions of this Declaration, except for the provisions of Section 2(b) (ii) above, shall be subordinated to the provisions of law and regulation then applicable to the subject land herein.

(12) Recordation. This agreement shall be recorded in the Office of the Clerk of the Berkeley County Council in both the name of the developer and the project name. It shall be the Declarant's responsibility to record the agreement and provide the Planning Department with confirmation of such recordation in the form of the deed book and page number reference.

(Subdivision Name)

Berkeley County Planning Commission File No. _____

XXXXXXXXXXXXXXXXXXXXXXXXXXXXXXXX
(Applicant/Developer Name)

By:_____ Date: ____/_____/_____

Print Name:_____ Title: _____

(Notary Certification Shall Be On The Same Page As The Signatures Being Notarized)

STATE OF _____, COUNTY OF _____, to wit:

I _____, a Notary Public in and for the state

and County aforesaid, do certify that _____

and _____, as _____

and _____, respectively of the _____,

whose names are signed to the foregoing, this day personally appeared before me in

my State and County aforesaid and acknowledged their signatures above (and Corporate Seal as the genuine Seal of the said corporation).

Given under my hand this ____ day of _____, 20 ___.

My Commission Expires: _____

COUNTY COUNCIL OF BERKELEY COUNTY, WEST VIRGINIA

By: _____ Date: _____

Print Name: _____

(Notary Certification Shall Be On The Same Page As The Signatures Being Notarized)

STATE OF _____, COUNTY OF _____, to wit:

I _____, a Notary Public in and for the state

and County aforesaid, do certify that _____

and _____, as _____

and _____, respectively of the _____,

whose names are signed to the foregoing, this day personally appeared before me in

my State and County aforesaid and acknowledged their signatures above (and Corporate Seal as the genuine Seal of the said corporation).

Given under my hand this ____ day of _____, 20 ___.

My Commission Expires: _____

ATTEST: _____
John Small
Clerk, County Council of Berkeley County, WV

(Added June 13, 2013)